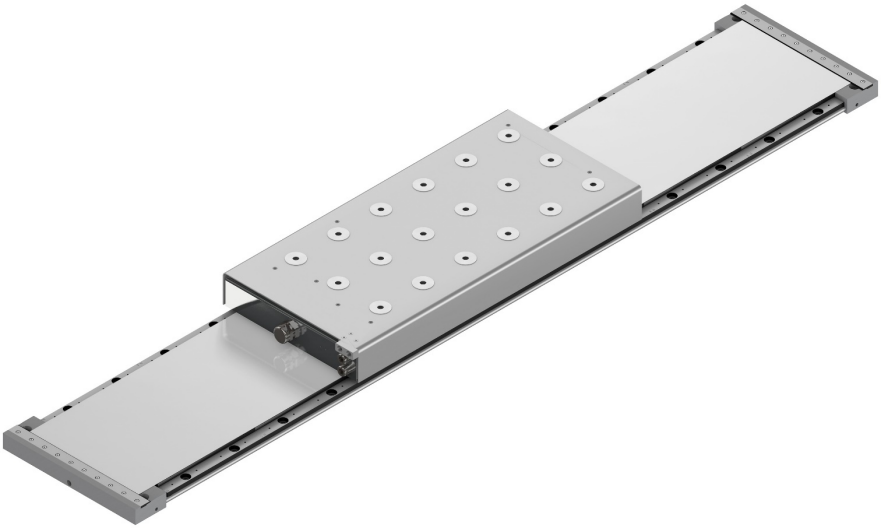

MM01UE01-2103

Assembly Instruction

Linear Motor

LM-Komponenten-03-2-EN-2412-MA

hiwin.de

Imprint

HIWIN GmbH

Brücklesbünd 1

77654 Offenburg

Germany

Fon +49 781 93278-0

info@hiwin.de

hiwin.de

All rights reserved.
Complete or partial reproduction is not permitted without our permission.

These assembly instructions are protected by copyright. Any reproduction, publication in whole or in part, modification or abridgement requires the written approval of HIWIN GmbH.

Contents

1 Installation and Safety Guide . . . 5
1.1 General precautions . . . 5
1.2 Description of safety notices and safety symbols . . . 5
1.3 Safety Instructions . . . 6
1.4 Power supply and controller selection . . . 11
1.5 Motor IP protection class . . . 12
1.6 Type plate . . . 13

2 Linear Motor Introduction . . . 14
2.1 Linear motor introduction . . . 14
2.2 Linear motor structure . . . 14
2.3 Water-cooling linear motor cooling system . . . 20
2.4 Temperature sensor . . . 21

3 Motor Performance and Water-cooling Motor Cooling System Design . . . 24
3.1 Linear motor selection . . . 24
3.2 Iron core linear motor Continuous force/peak force, attraction force vs. air gap . . . 25
3.3 Environmental temperature and Continuous force . . . 40
3.4 Motor heat calculation . . . 41
3.5 Cooling system calculation . . . 43
3.6 Cooling machine selection . . . 45

4 Motor Mechanical Interface . . . 50
4.1 Iron core linear motor assembly interface . . . 50
4.2 Ironless linear motor (LMC) mechanical installation interface . . . 57
4.3 Shaft linear motor (LMT) mechanical installation interface . . . 58
4.4 Forcer parallel design . . . 61
4.5 LMFA/LMFP Water-cooling motor cooling tube design . . . 72
4.6 LMFA/LMFP water-cooling motor with LMFC precision water-cooling channel design . 73
4.7 Material used in water-cooling channel . . . 76
4.8 Coolant of water-cooling linear motor . . . 76

5 Motor assembly . . . 77
5.1 Iron core linear motor installation . . . 77
5.2 Ironless linear motor installation . . . 88
5.3 Water-cooling linear motor cooling system installation . . . 92

6 Selection of Motor Accessory and Power Cable . . . 95
6.1 Standard specification of power cable . . . 95
6.2 Recommended construction method for grounding protection . . . 95
6.3 Recommended installation method of extension cable . . . 97
6.4 Connector selection and pin assignment . . . 99
6.5 Configuration of over-temperature protection . . . 104
6.6 Hall sensor . . . 105
6.7 Hall encoder . . . 112

7 Troubleshooting . . . 115

8 Waste Disposal . . . 116

9 Appendix . . . 117
9.1 Screw selection rules and instructions . . . 117

9.2 Moving direction of Linear motor 122
9.3 Introduction of Specific Terms. 123

10 Declaration of Conformity 126

1 Installation and Safety Guide

1.1 General precautions

Before using the product, please carefully read through this manual. HIWIN is not responsible for any damages, accidents, or injuries caused by failure in following the installation instructions and operating instructions stated in this manual.

- Before installing or using the product, ensure there is no damage to its appearance. If any damage is found after inspection, please contact HIWIN or local distributors.
- Do not disassemble or modify the product. The design of the product has been verified by structural calculation, computer simulation, and actual testing. HIWIN is not responsible for any damage, accident or injury caused by disassembly or modification done by users.
- Keep children away from the product.
- Anyone with a pacemaker or A.I.C.D is prohibited from using the product.
- The product should be operated only by personnel with experience and technical knowledge.

1.2 Description of safety notices and safety symbols

Safety notices are always indicated using a signal word and sometimes also a symbol for the specific risk.

The following signal word and risk levels are used:

⚠ Danger! Imminent danger!

Non-compliance with the safety notices will result in serious injury or death!

⚠ Warning! Potentially dangerous situation!

Non-compliance with the safety notices runs the risk of serious injury or death!

❗ Attention! Potentially dangerous situation!

Non-compliance with the safety notices runs the risk of damage to property or environmental pollution!

The following symbols are used in this user manual:

Warning symbols			
	No access for people with active implanted cardia devices.		Substance hazardous to the environment!
	Warning!		Warning of crushing of hands!
	Warning of electricity!		Warning of hot surface!
	Warning of magnetic field!		

1.3 Safety Instructions

⚠ Danger! Risk of death as a result of permanent magnet fields

Even when the motor is switched off, the permanent magnets can put people with active medical implants at risk if they are close to the motor.

Stator assembly has a strong magnetic field; users must handle with care. Otherwise, personnel may get injured and the stator may be damaged.

- During assembly of stator to system structure, keep any magnetic material at a distance to prevent the risk of injury to hands.
- Do not touch the forcer and stator during operation.
- If you are affected, stay at a minimum distance of 500 mm from the motors (trigger threshold for static magnetic fields of 0,5 mT as per directive 2013/35/EU).

⚠ Warning! Risk related to Linear motor assembly. Danger of crushing by permanent magnets of the stator

The attraction forces of the stator act on materials that can be magnetized. The forces of attraction increase significantly close to the stator.

There is a significant risk of crushing when you are close to the stators.

Close to the stators, the forces of attraction can be several kN – example: Magnetic attractive forces are equivalent to a force of 100 kg, which is sufficient to trap a body part.

- The product should be installed and operated by specialized personnel.
- During assembly, avoid using magnetic tools and screws.
- Before fixing the stator, please adhere the label of strong magnetic field to the position where it can easily be seen to prevent personnel from injury.
- Whenever disassembling the stator, do not handle the stator with the edge of the cover directly. Otherwise, personnel may get injured and the stator may be damaged.
- Never unpack several secondary sections at the same time.
- Never place secondary sections next to one another without taking the appropriate precautions.

⚠ Warning! Risk of Linear motor operate!

When incorrectly operated and in the case of a fault, the motor can overheat resulting in fire and smoke. This can result in severe injury or death. Further, excessively high temperatures destroy motor components and result in increased failures as well as shorter service lives of motors.

- Operate the motor according to the relevant specifications.
- Allow the forcer to cool down sufficiently (in a 25 °C room temperature) before working around the product to avoid burns.
- When an abnormal smell, noise, smoke, or vibration is detected, please turn off the power immediately.

⚠ Warning! Burn injuries caused by hot surfaces

In operation, the motor can reach high temperatures, which can cause burns if touched.

- Operate the motor according to the relevant specifications.
- Allow the motor to cool down before starting any work.
- Use the appropriate personnel protection equipment, e.g. gloves.

Attention! Damage caused by assembly

Electric fields or electrostatic discharge can cause malfunctions through damaged Individual components, integrated circuits, modules or devices.

- Keep magnetic storage media or precision instruments away from the product to avoid damage-caused fields. (e. g. magnetic scale, watch, credit card and magnetic response device).
- Precautions should be taken for ESD (Electrostatic Discharge), like wearing gloves, shoes, etc.
- Do not drag the cables while moving or placing the forcer and stator units.
- Do not damage or bend the cables to avoid electric shock.
- Be sure to confirm that there is no interference with other components in the operations. Confirm that the cable bending radius is large enough to prevent reducing the lifetime of the cables.

Attention! Product precautions.

Product appearance description and avoid damage caused by improper disassembly.

- Clean stator surface by using disposable cotton rags and cleaning liquid such as isopropanol alcohol (95 % Vol.). It is suggested to clean the surface once every three months or once every two weeks in high fume formation rate facilities with machines such as PCB machines or drilling machines.
- The products with epoxy have some spots on the surface, and it is a natural phenomenon.
- The product can only be repaired by HIWIN engineers. Please send the product back to HIWIN if there are any unusual occurrences.
- Do not change or disassemble the components by yourself. HIWIN will not take responsibility for any accidents or damages to the forcer and stator caused by this.
- A one year guarantee is provided from the date of delivery. HIWIN will not be held responsible for replacing or maintaining a product which has been incorrectly handled (please refer to the notes and instructions in this manual) or damaged due to natural disasters.

- When taking or placing the product, do not just pull the cable and drag it.
- Do not subject the product to shock.
- Ensure the product is used with rated load.
- According to IEC 60034-5 standard, HIWIN Linear motor have the class of protection (refer to 1.3.4).
- HIWIN Linear motor have a thermal class F according to IEC 60085 standard.

HIWIN Linear motor certification test meets the following standards

CE	LVD Safety: 2014/35/EU reference standard	EN60034-1:2010
	EMC: 2014/30/EU reference standard	EN61000-6-4:2007/A1:2011
		EN61000-6-2:2005
UL	Linear motor reference standard 1004-1	

1.3.1 Intended use

The linear motor components are designed exclusively for installation in commercial and industrial machines. Linear motor components are parts of a linear drive system for the precise

positioning in terms of time and location of fixed mounted loads, e. g. system components, within an automated system.

Linear motors are designed for installation and operation in any position. The loads being moved must be firmly attached.

For the safe operation of linear motors, suitable safety precautions must be taken to protect the motor against overload.

The linear motor components may not be used outdoors or in hazardous areas where there is a risk of explosions.

All linear motor components may only be used for the stated intended purpose.

- The linear motors must be operated within its specified performance limits.
- Observation of the assembly instructions and compliance with the maintenance and repair regulations are prerequisites for the intended use of the linear motors.
- Any other use of the linear motor components shall be considered as contrary to the intended use.
- Use only genuine spare parts from HIWIN GmbH.
- The motor must avoid dirt and contact with corrosive substance.
- Ensure that the installation conditions conform the specifications.

1.3.2 Personnel requirements

Only trained personnel or trained specialist personnel may carry out work on the linear motors! They must be familiar with the safety equipment and regulations before starting work (see Table 1.1).

Table 1.1: Personnel requirements

Activity	Qualification
Commissioning	Trained specialist personnel of the operator or manufacturer
Normal operation	Trained personnel
Cleaning	Trained personnel
Maintenance	Trained specialist personnel of the operator or manufacturer
Repairs	Trained specialist personnel of the operator or manufacturer

1.3.3 Wiring precautions

- Before using the product, carefully read through the specification noted on the product label, and ensure the product is used with power supply specified in the product requirement.
- Check if the wiring is correct. Incorrect wiring may make the motor operate abnormally, or even cause permanent damage to the motor.
- Select extension cord with shielding. The shielding must be grounded.
- Do not connect power cable and temperature sensor cable to the same extension cord.
- Power cable and temperature sensor cable contain shielding. The shielding must be grounded.

1.3.4 Maintenance and storage precautions

⚠ Warning! Product precautions.

If you do not correctly dispose of direct drives or their components (especially components with permanent magnets), then this can result in death, severe injury and/or material damage.

- Disposal method of the damaged product: recycle it according to local laws and regulations.
- Refer to Chapter 8 for related disposal methods.

- Store the Linear motor components in their transport packaging.
- Do not store the Linear motor components in explosive atmospheres or in environments exposed to chemicals.
- Only store the Linear motor components in dry, frost-free areas with a corrosion-free atmosphere.
- Make sure that the motors are not subjected to vibrations or impacts while in storage.
- Clean and protect used Linear motor components before storage.
- When storing the components, attach signs warning of magnetic fields.

Operating environment	Temperature	0 – 40 °C
	Humidity	5 – 85 %
Storage environment	Temperature	−5 °C – 40 °C
	Humidity	5 – 85 %
Altitude		Below 1000 M
Temperature variation speed		Maximum 0,5 K/min
Condensation		Not allowed
Frozen		Not allowed

1.3.5 Transport precautions

- Permanent magnets are listed as Dangerous Goods (Magnetized material: UN2807) according to International Air Transport Association (IATA).
- For products containing permanent magnets, no additional measures on packaging are required to resist the magnetic field in sea freight and inland transportation.
- When transporting products containing permanent magnets by air, the maximum permissible magnetic field strengths specified by the appropriate IATA Packing Instruction must not be exceeded. Special measures may be required so that these products can be shipped. Above a certain magnetic field strength, such shipments must be labelled in accordance with Packing Instruction 953 from IATA (Please refer below or the latest regulation from IATA.)
  - Products whose highest field strength exceeds 0,418 Am / (0,525 $\mu\mathrm{T}$) or 2° of compass deviation, as determined at a distance of 4,6 m from the product, require shipping authorization from the responsible national body of the country from where the product is being shipped (country of origin) and the country where the airfreight company is based. Special measures need to be taken to enable the product to be shipped.
  - When shipping products whose highest field strength is equal to or greater than 0,418 Am / (0,525 $\mu\mathrm{T}$) or 2° of compass deviation, as determined at a distance of 2,1 m from the product, shipment is conducted with regulation of Dangerous Goods Transportation.
  - When shipping products whose highest field strength is less than 0,418 Am / (0,525 μT), as determined at a distance of 2,1 m from the product, you do not have to notify the relevant authorities and you do not have to label the product.

- Shipping originally packed motor components neither has to be disclosed nor marked.
- Transport conditions must comply with EN 60721-3-2 (Please refer to Table 1.2).

Table 1.2: Transport conditions

Environmental parameter	Unit	Value
Air temperature	(°C)	−5 – 40
Relative humidity	(%)	5 – 85
Rate of change of temperature	(°C/min)	0,5
Condensation		Not allowed
Formation of ice		Not allowed
Transport condition		Class 2K2
Transport the motor in an environment with good weather protection (indoor/factory)		
Biological conditions	Class 2B1	
Chemically active substances	Class 2C1	
Mechanically active substances	Class 2S2	
Mechanical conditions	Class 2M2	

1.4 Power supply and controller selection

The continuous current, peak current and bus voltage must be considered while selecting a power supply. In addition, the resonance effect which can be induced in motors by some drive systems must be taken into account. Motors are assembled with several individual coils connected in series. Each one of these coils has an inductance in series and a stray capacitance to earth. The LC network obtained possesses a resonant frequency, so when an electrical oscillation is applied to the phase inputs (in particular the PWM frequency), the neutral point of the motor can oscillate with very high amplitudes with respect to earth, and the insulation can be damaged as a consequence of these oscillations. This phenomenon is more pronounced in motors with a large number of poles (such as Linear motors).

Under ideal conditions, the 600 VDC bus voltage generated by the power supply should be ±300 VDC relative to earth. However, in some configurations, the voltage between the buses and earth will have an oscillating voltage, and the peak of the high voltage will be transmitted to the motor. The oscillation between voltage and earth depends on system characteristics. By experience, a system with few axes connected to the bus voltage is less liable to have disturbing oscillations on the bus, but for example in a large machine tool with many axes and several spindles, the oscillations can reach high amplitudes. If the frequency of these oscillations is close to the resonant frequency of the motor, it can lead to over-voltage failures on the neutral point.

The case where the PWM frequency of the controller happens to correspond to the resonant frequency of the motor. In this case, the fundamental harmonic of the PWM frequency is directly exciting the resonant frequency of the motor, and very high voltages are thus obtained on the neutral point. Also, as the PWM voltage is a square wave, it contains odd harmonics (1, 3, 5, 7, etc.) that can also excite the motor resonance. Fortunately, these harmonics have a smaller amplitude that the fundamental.

In another case, it may also lead an over-voltage failure. In this case, the fundamental harmonic of the PWM frequency is directly exciting the resonant frequency of the motor, and very high voltages are thus obtained on the neutral point. In addition, because the PWM voltage is a square wave, it contains odd harmonics (1, 3, 5, 7, etc.) that can also excite motor resonance.

In conclusion, to prevent any failure from occurring, two elements must be considered: the oscillations between the bus voltage and earth and the PWM frequency. If both elements above do not enter into resonance with the motor, then there is no risk for the motor.

When selecting power supply, please check the conditions below:

- 300 VDC controller: 750 Vp (phase to ground), voltage gradient: 8 kV/µs.
- 600 or 750 VDC controller: 1.000 Vp maximum (at the PWM frequency) and spikes up to 1.400 V (earth to peak and for a few µs) and a voltage gradient: 11 kV/µs.

The cable between the controller and the motor will generate a reflected wave due to the impedance mismatch between the cable and the motor, and the reflected voltage will be superimposed with the subsequent input voltage, causing the voltage to rise. This phenomenon will be more obvious when the motor cable is longer. If the length of the cable between the controller and the motor is longer than 10 m, it is necessary to measure voltages at the motor terminals to ensure they are lower than specified above. If the measured value is greater, a dV/dt filter must be inserted between the controller and the motor for protection.

1.5 Motor IP protection class

Linear motor applies to IEC to define the protection class. The first number of IP□□ means the protection class against dust ingress. Class 6 refers to total protection against dust ingress. The second means protection class against water ingress. Class 0 means no protection. Class 5 means protection against low pressure water jets from any direction. Class 6 means protection against high pressure water jets from any direction.

○ IP protection class for different motor types.

Linear motor	Protection class
LMSA	IP60
LMFA	IP60
LMFP	IP65
LMSC	IP60
LMC	IP60
LMSS	IP60
LMT	IP66

The stators are largely protected against corrosion by their mechanical design. However, suitable constructive measures have to be taken to prevent that ferromagnetic particles (for example, iron chips) accumulate on the stator.

Contact with liquids and general contact with corrosive media must be avoided by suitable protective measures (encapsulation, bellows, protective lacquer).

1.6 Type plate

- Information about the type plates for the different motor types. (Type plate example)

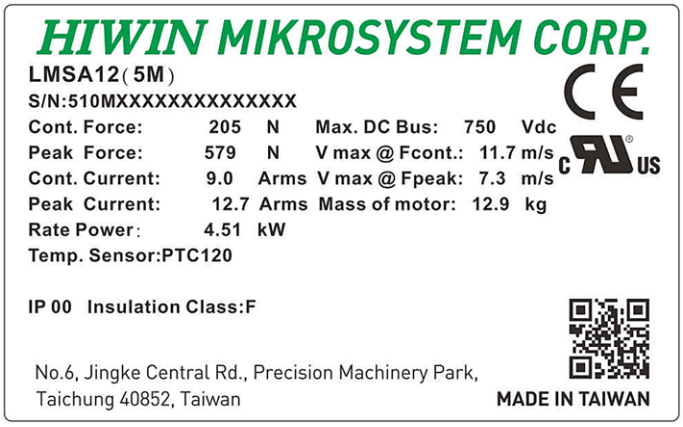

2 Linear Motor Introduction

2.1 Linear motor introduction

Linear motors can be divided into iron core and ironless linear motors. An iron core linear motor has a relatively greater thrust force, and an ironless linear motor is relatively more compact with greater dynamic characteristics. Since there is no transmission mechanism between the motor and the load, the load can be driven directly. Accordingly, the mechanism is relatively simple and a remarkable dynamic response can be achieved. Furthermore, linear motors adopt the contactless design such that there is no wear and higher precision can be provided while the maintenance and care required can also be reduced. The stator of a linear motor adopts the module assembly method and the number of acceptable assemblies is unlimited such that the length of the stroke is not restricted.

2.2 Linear motor structure

2.2.1 Iron core linear motor (LMSA/LMSA-Z/LMSS) structure

LMSA/LMSA-Z/LMSS product is an iron core motor, and the forcer consists of an iron core, coil and epoxy assembled together. Since the iron core interacts with the magnet, this series of motor is affected by the cogging force and the attraction force between the forcer and stator. Accordingly, during the design of the forcer installation base, it is necessary to consider such factors. This product is suitable to be used for high acceleration and deceleration applications, such as: conveyor/transportation equipment, digital printing, 3D printing, PCB drilling machine, Light processing machine etc.

Fig. 2.1: Forcer structure

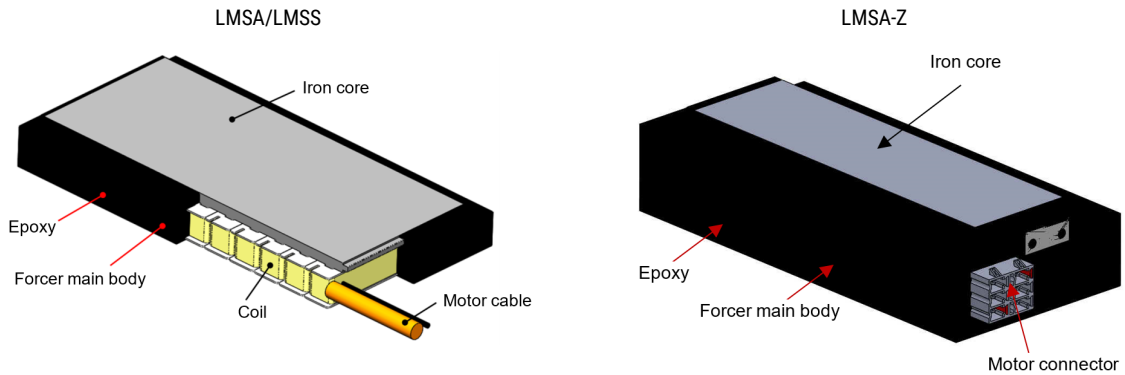

The stator of LMSA//LMSA-Z/LMSS, as viewed from the top, is of a rectangular structure. Customers can select the Cover or Epoxy version of the stator according to the industrial application. In addition, the stator can also be used as a moving part.

Fig. 2.2: Stator structure

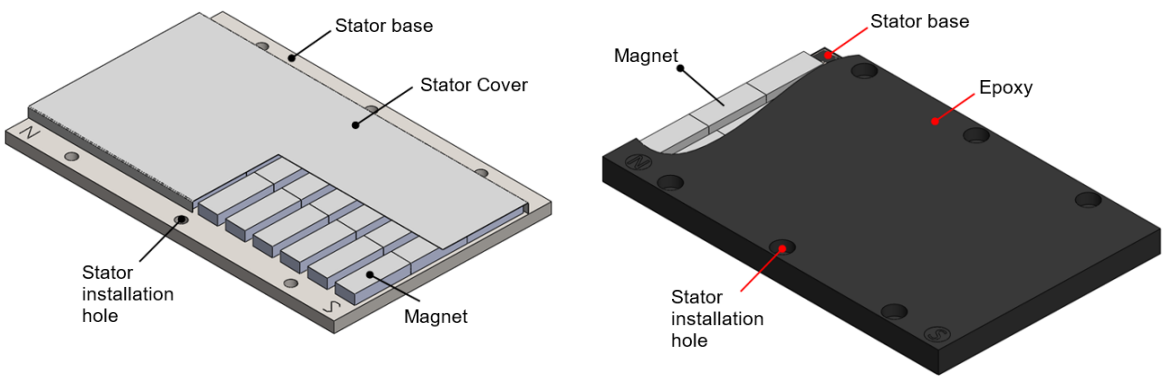

During the installation of the motor, please be aware of the air gap between the forcer and the stator. For the relationship between the air gap of an iron core linear motor and the motor performance, please refer to Chapter 3.2 of the Manual.

For the installation guidelines on the forcer and stator of the motor, please refer to Chapter 5.1 of the Manual. Since a strong attraction force exists between the forcer and stator, please do not arbitrarily remove the stator and do not use magnetic material to approach the device in order to prevent any danger. In addition, the stator assembly length must be greater than the length of the forcer; otherwise, unexpected risk may occur.

Fig. 2.3: Forcer and stator structure

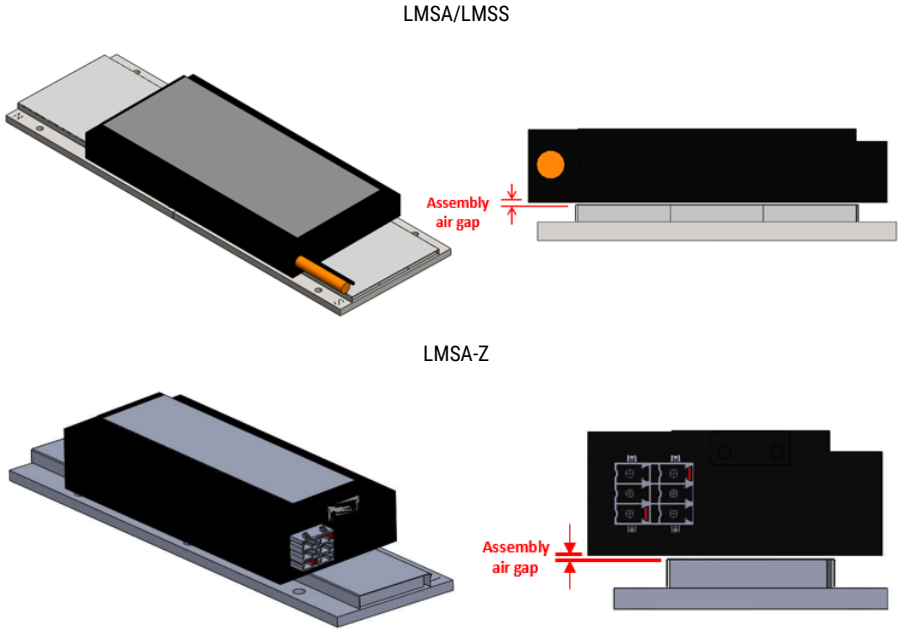

2.2.2 Water-cooling linear motor (LMFA/LMFP) structure

LMFA/LMFP product is an iron core water-cooling motor, and the forcer consists of an iron core, forcer base, coil, cooling copper tube and epoxy assembled together. Since the iron core interacts with the magnet, this series of motor is affected by the cogging force and the attraction force between the forcer and stator. Accordingly, during the design of the forcer installation base, it is necessary to consider such factors. This product utilizes a cooling system to increase the motor performance, and it is suitable to be used for heavy load applications, such as: conveyor/transportation equipment, PCB drilling machine, grinding machine etc.

Fig. 2.4: Forcer structure

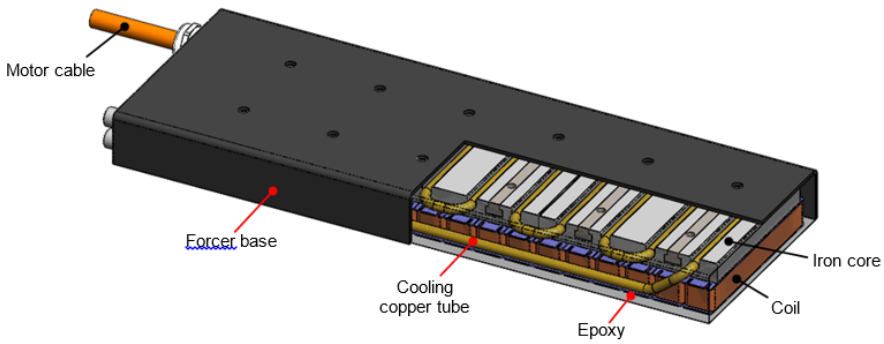

The stator of LMFA/LMFP, as viewed from the top, is of a rectangular structure. Customers can select the Cover or Epoxy version of the stator according to the industrial application.

Fig. 2.5: Stator structure

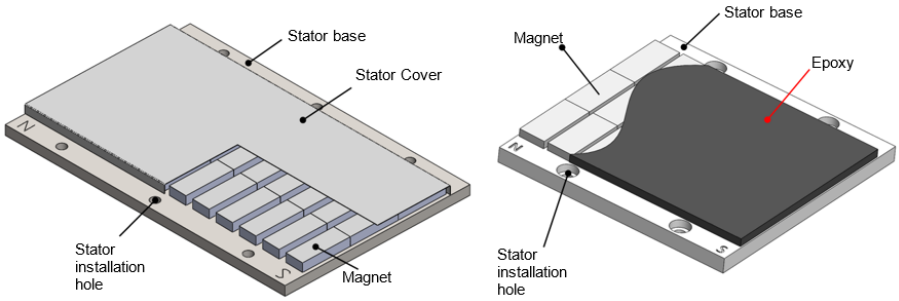

During the installation of the motor, please be aware of the air gap between the forcer and the stator.
For the relationship between the air gap of an iron core linear motor and the motor performance, please refer to Chapter 3.2 of the Manual.

For the installation guidelines on the forcer and stator of the motor, please refer to Chapter 5.1 of the Manual. Since a strong magnetic attraction force exists between the forcer and stator, please do not arbitrarily remove the stator and do not use magnetic material to approach the device in order to prevent any danger. In addition, the stator assembly length must be greater than the length of the forcer; otherwise, unexpected risk may occur.

Fig. 2.6: Forcer and stator structure

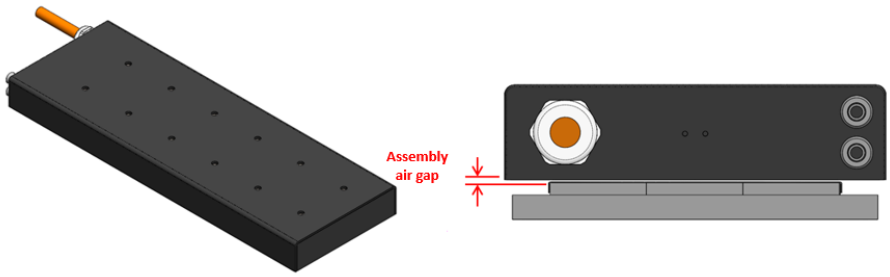

2.2.3 Iron linear motor (LMSC) structure

LMSC product is an iron core motor, assembled by iron core, forcer base, coil and epoxy. Since the iron cores are arranged back-to-back, the attraction force between forcer and stator could be offset, load on guideway is greatly reduced and the lifetime of the guideway could be extended.

This product is suitable to be used for high acceleration applications such as conveyor/transportation equipment, automation production line and lightweight processing equipment.

Fig. 2.7: Forcer structure

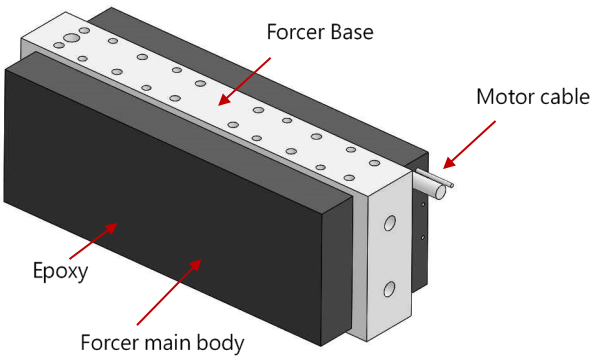

2.2.4 Ironless linear motor (LMC) structure

LMC product is an ironless motor. From the force assembly drawing of Fig. 2.8, it can be understood that the internal of the forcer does not consist of an iron core but coil only, such that it is formed by a forcer base and epoxy assembled together. Since it is an ironless structure, this series of motor has no cogging force, no attraction force between the forcer and stator, and has the characteristic of low inertia. It is suitable to be used for applications of high speed and light load and applications requiring extremely low-speed ripple and low magnetic field dissipation, such as: optical inspection equipment, scanning type electronic microphone equipment etc.

Fig. 2.8: Forcer structure

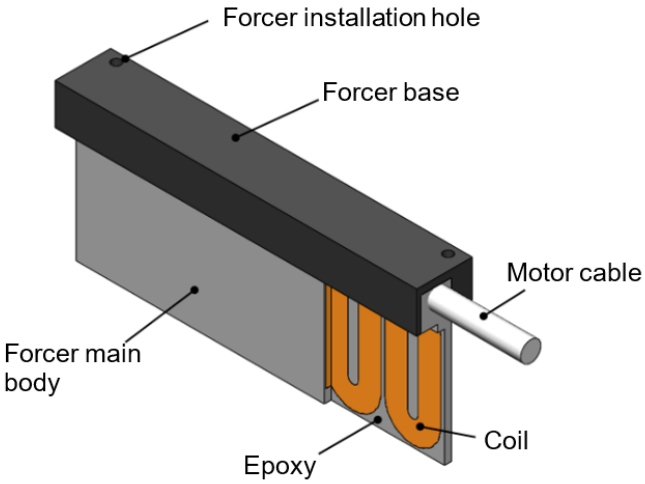

The stator of LMC, as viewed from the side, is a U-shape structure, and it consists of a base and two rows of magnets assembled together as shown in Fig. 2.9. Since the quantity of the magnets is greater than the iron core linear motor, its overall weight is heavier than the forcer. Accordingly, customers are not required to use the stator as a moving part.

Fig. 2.9: Stator structure

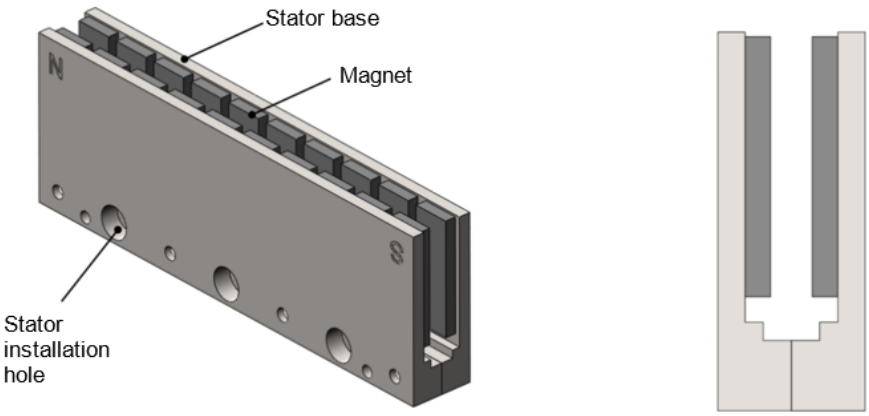

The cut-out portion of the U-shape structure of the LMC stator is to allow the forcer to move between the stator. During the installation of the motor, please be aware of the assembly gap between the stator, as shown in Fig. 2.10. For the installation guidelines for the motor forcer and stator, please refer to Chapter 5.2 of the Manual. Since the magnets used by the stator are of strong magnetic attraction force, please do not arbitrarily remove the stator or use magnetic material to approach the stator in order to prevent any danger.

Fig. 2.10: Forcer and stator structure

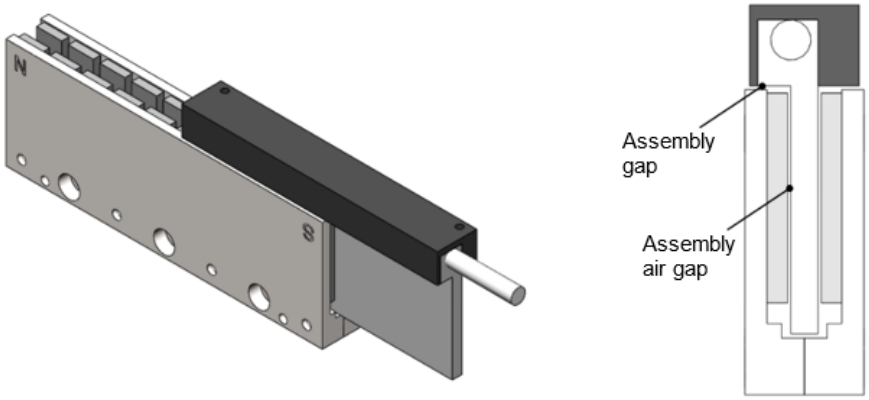

2.2.5 Shaft linear motor (LMT) structure

The LMT series product of the Company is an ironless shaft motor. Due to the ironless structure, the motor characteristics are consistent with the characteristics of the LMC series, such that it not has cogging force, the Attraction force, and has the characteristic of low inertia. The forcer assembly is as shown in Fig. 2.11, and its internal structure is ironless. The difference between LMT and LMC relies on that LMT is a relatively more compact simple structure with an outer appearance resembling a screw shaft linear mechanism, making it easy for maintenance and the mechanism space utilization rate can be increased. For customers changing from screw shaft linear mechanism to direct drive linear mechanism, it is the most optimal solution for use. Its common application includes: optical inspection equipment, machine tool wire cutting equipment, scanning electronic microscope equipment, food automation equipment and medical automation industry etc.

Fig. 2.11: Forcer structure

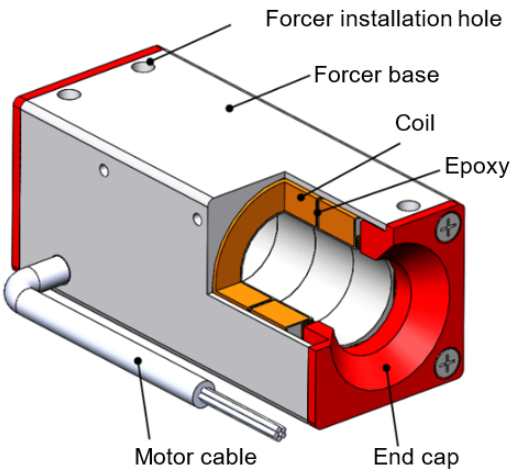

The outer appearance of LMT stator is a sealed circular rod, and it is formed by the stator outer tube and magnets, as shown in Fig. 2.12. During the motor installation, please be aware of the assembly gap between the forcer and stator, as shown in Fig. 2.13. For the installation guidelines for the motor forcer and stator, please refer to Chapter 5.2 of the Manual. Since the magnets used by the stator are of strong magnetic attraction force, please do not arbitrarily remove the stator or use magnetic material to approach the stator in order to prevent any danger.

Fig. 2.12: Stator structure

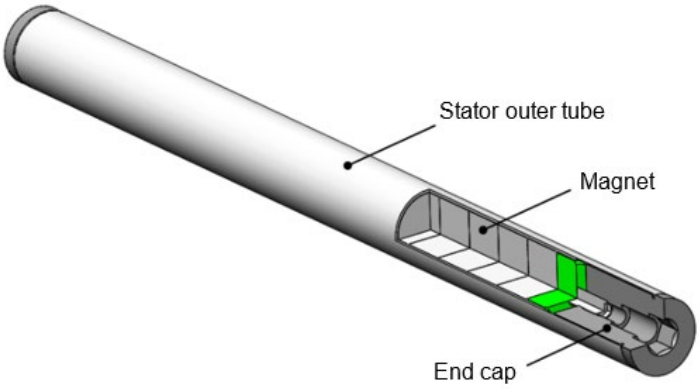

Fig. 2.13: Forcer and stator structure

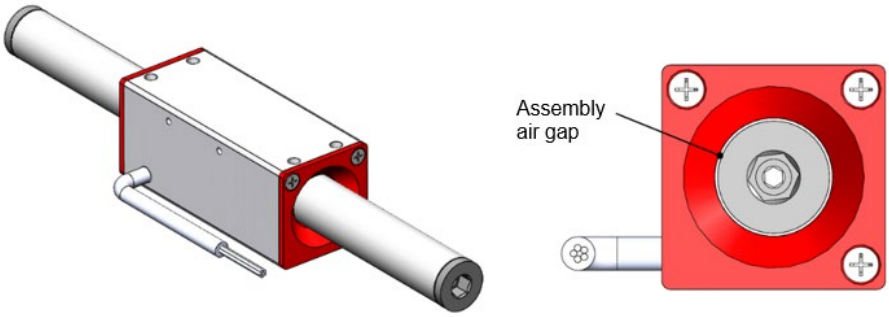

2.3 Water-cooling linear motor cooling system

HIWIN LMFA/LMFP series motor adopts the internal water-cooling method to achieve the most optimal motor performance. In addition to the internal water-cooling, LMFA/LMFP series motor is also equipped with the option of LMFC precision water-cooling accessory capable of increasing the heat exchange area and isolating the heat transfer from the motor, in order to significantly reduce the temperature of the machinery of customers. The temperature distribution comparison is as shown in Fig. 2.14, thereby satisfying the application demand of high precision. Its structure is as shown in Fig. 2.15.

Fig. 2.14: Temperature distribution comparison image

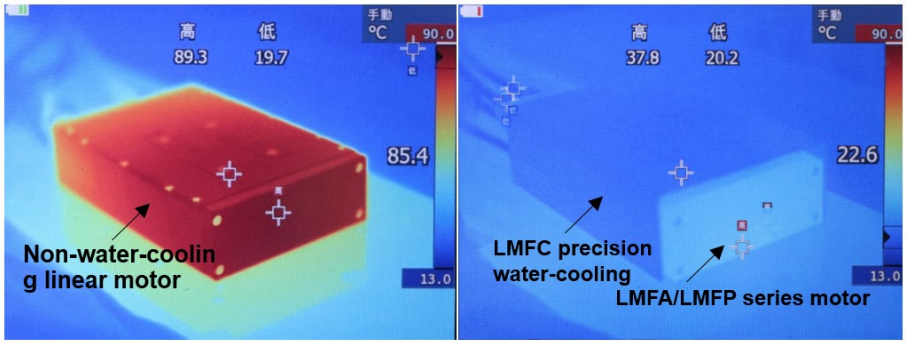

Fig. 2.15: LMFA/LMFP series with LMFC precision water-cooling motor basic structure

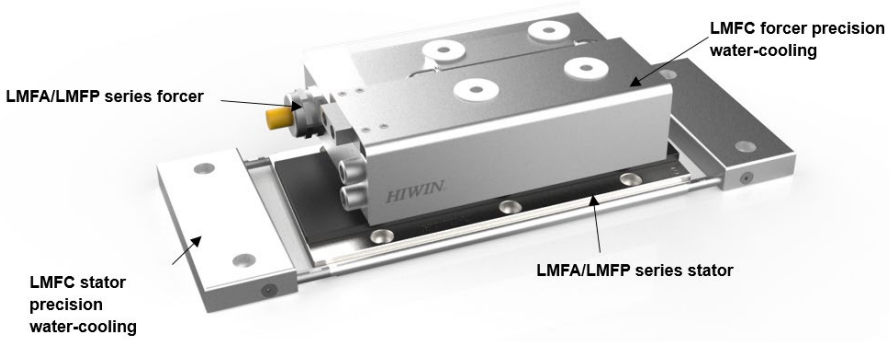

2.3.1 LMFC forcer precision water-cooling

The internal LMFA/LMFP series motor is equipped with coolant channels, and the coolant enters into the internal of the motor from the water-cooling connector inlet to perform cooling. After passing through the sealed channels for heat dissipation, the coolant returns back to the water-cooling machine via the water-cooling connector outlet. For a motor equipped with the LMFC forcer precision water-cooling, a LMFC precision water-cooling accessory is installed on top of the original LMFA/LMFP forcer. The insulation material provided for the precision water-cooling is used to isolate the heat transfer. The coolant enters into the motor to perform cooling via the water-cooling connector inlet, and after passing through the sealed channels for heat dissipation, it then returns back to the water-cooling machine via the water-cooling connector outlet.

2.3.2 LMFC stator precision water-cooling

The cooling design for the heat dissipation of the stator is only provided for the LMFC precision water-cooling series. The LMFC stator precision water-cooling is installed underneath the LMFA/LMFP stator. The coolant enters into the motor to perform cooling via the water-cooling connector inlet, and after passing through the sealed channels for heat dissipation, it then returns back to the water-cooling machine via the water-cooling connector outlet in order to achieve fast heat dissipation effect.

2.4 Temperature sensor

Linear motors are built-in with a temperature sensor to provide signal to the control system in order to achieve necessary motor over-temperature protection.

Motor protection by temperature monitoring alone using PTC elements can be insufficient. This is the case, for example, if the motor is operated with currents above continuous current.

HIWIN advises the use of additional protective algorithm on the control side. The calculation of max. operating time with currents above continuous current can refer to 3.4.3 .

The common temperature sensors include PTC, Pt1000 etc. For the type of temperature sensors equipped in a motor, please refer to the catalog or acceptance drawings, and the performance of temperature sensors is described in the following respectively:

2.4.1 PTC temperature sensor

PTC 100 and PTC 120 are a thermistor respectively, and their output resistance changes along with the temperature of the coil. The resistance of PTC 100 increases significantly when T_REF = 100 °C, and the resistance of PTC 120 increases significantly when T_REF = 120 °C. Their characteristics are as follows:

Table 2.1: PTC temperature sensor characteristics

Temperature	Resistor
$20°C < T < T_{REF} - 20K$	20 Ω – 250 Ω
$T = T_{REF} - 20K$	≤ 550 Ω
$T = T_{REF} + 5K$	≥ 1.330 Ω
$T = T_{REF} + 15K$	≥ 4.000 Ω

Fig. 2.16: PTC temperature to resistance relationship graph

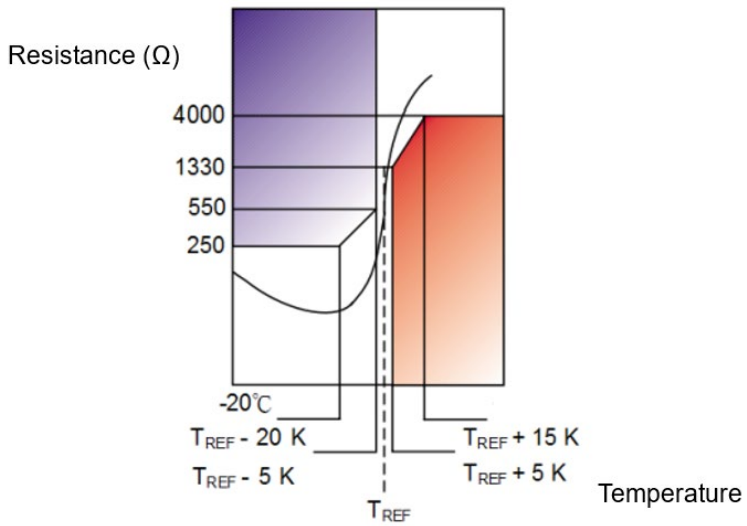

2.4.2 Pt1000 temperature sensor

Pt1000 is a platinum resistor temperature sensor (RTD), and its characteristic is that when the temperature is 0 °C, its resistance is 1.000 Ω. The actual temperature can be obtained by measuring the output resistance. The resistance and temperature relationship is as shown in Fig. 2.17, and the standard equation between the resistance and temperature is expressed in the following:

When the temperature range is -200 °C – 0 °C

$$R_\theta = R_0[1 + A\theta + B\theta^2 + C(\theta - 100)\theta^3]$$

When the temperature range is 0°C – 850°C

$$R_\theta = R_0(1 + A\theta + B\theta^2)$$

$R_0 = 1000$ [Ω]

θ =Operating temperature [°C]

$A = 3.9083 \times 10^{-3}$ [°C-1]

$B = -5.7750 \times 10^{-7}$ [°C-2]

$C = -4.1830 \times 10^{-12}$ [°C-4]

Fig. 2.17: Pt1000 resistance and temperature relationship graph

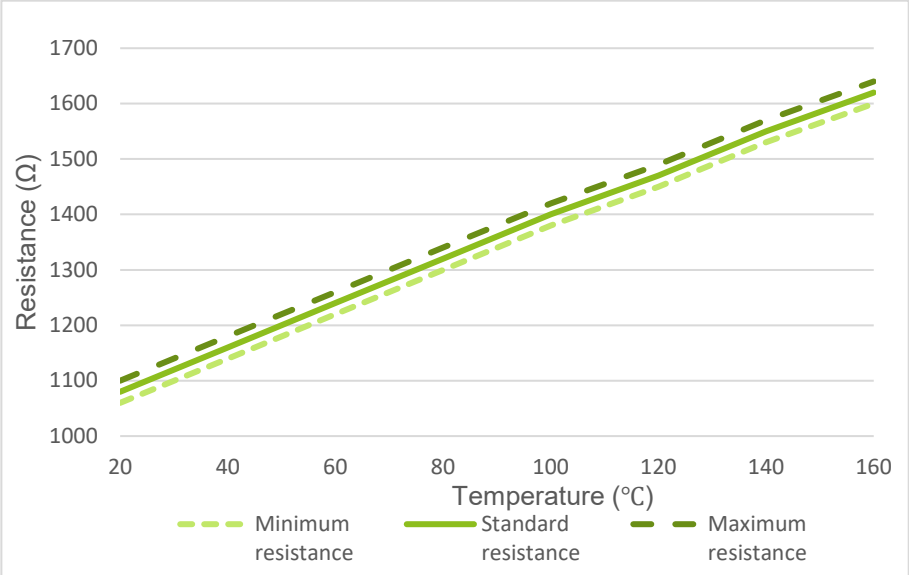

2.4.3 KTY84 temperature sensor

KTY84-130 is a silicon temperature sensor, and the actual temperature can be obtained by measuring the output resistance. Its characteristic is as shown in Fig. 2.18 and the relationship between the resistance and temperature is as shown in Fig. 2.18.

Table 2.2: KTY84-130 temperature sensor characteristics

Symbol	Parameter	Criteria	Minimum value	Standard value	Maximum value	Unit
R_{100}	Resistance when temperature below 100 °C	$I_{(out)} = 2mA$	970	-	1.030	Ω
R_{250} / R_{100}	Resistance ratio	T = 250 °C and 100 °C	2.111	2.166	2.221	Ω
R_{25} / R_{100}	Resistance ratio	T = 25 °C and 100 °C	0,595	0,603	0,611	Ω

Fig. 2.18: KTY84-130 resistance and temperature relationship graph

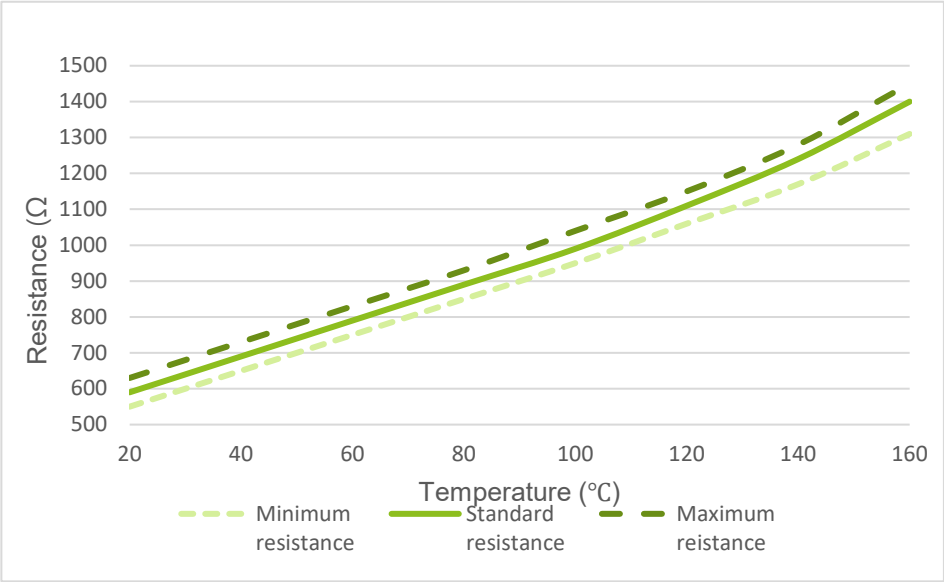

2.4.4 Connection to the drive amplifier

The temperature monitoring circuits can normally be connected directly to the drive control. If the protective separation requirements in accordance with EN61800-5-1 are to be fulfilled, the sensors must be connected to the decoupling modules provided by the drive manufactures.

3 Motor Performance and Water-cooling Motor Cooling System Design

3.1 Linear motor selection

According to the industrial applications, they can be mainly divided into the point-to-point movement and scanning application. Iron core linear motors are suitable for the application of point-to-point movement, and ironless linear motors are suitable for the scanning application, as shown in Fig. 3.1.

Fig. 3.1: Linear motor application illustration images

3.2 Iron core linear motor Continuous force/peak force, attraction force vs. air gap

The linear motor Continuous force/peak force and the attraction force between the forcer and stator change along with the assembly air gap between the forcer and stator. In this chapter, the relationship between the Continuous force/peak force, attraction force and assembly air gap of each series motor is described in order to provide such information as reference for motor selection and mechanical design.

3.2.1 LMSA Series

- Continuous force/peak force and air gap

Fig. 3.2: LMSA Continuous force/peak force-air gap relationship graph

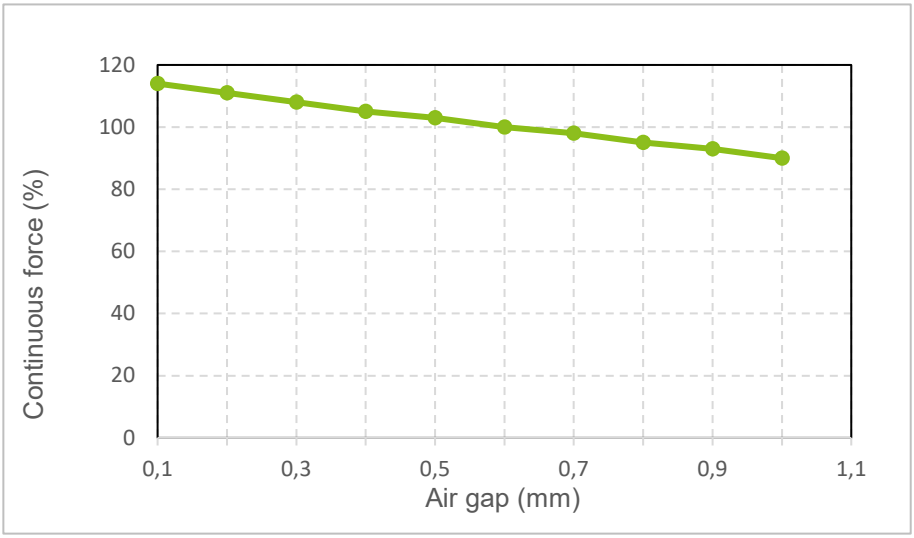

Table 3.1: LMSA Continuous force/peak force-air gap comparison chart

Series	LMSA1□– LMSAC□ / LMSA□□-Z									
Air gap (mm)	0,1	0,2	0,3	0,4	0,5	0,6	0,7	0,8	0,9	1,0
Force (%)	114	111	108	105	103	100	98	95	93	90

- Attraction force and air gap

Fig. 3.3: LMSA Continuous force/peak force-air gap comparison chart

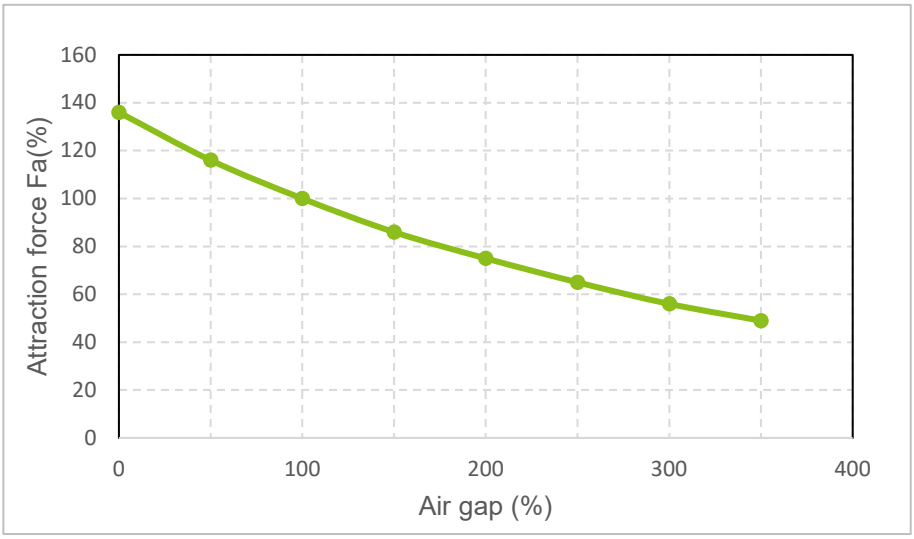

Table 3.2: LMSA attraction force-air gap comparison chart

LMSA1□(-Z) –LMSA2□(-Z) series attraction force. Unit: N							
Air gap (mm)	**LMSA11 LMSA11-Z**	**LMSA12 LMSA12-Z**	**LMSA13 LMSA13-Z**	**LMSA21 LMSA21-Z**	**LMSA22 LMSA22-Z**	**LMSA23 LMSA23-Z**	**LMSA24**
0	653	1.306	1.959	1.306	2.612	3.918	5.224
0,3	560	1.120	1.680	1.120	2.240	3.360	4.480
0,6	481	963	1.444	963	1.926	2.888	3.851
0,9	415	830	1.245	830	1.660	2.490	3.320
1,2	359	718	1077	718	1.436	2.154	2.872
1,5	312	624	936	624	1.248	1.872	2.496
1,8	271	542	813	542	1.084	1.626	2.168
2,1	236	472	708	472	944	1.416	1.888
5	66	132	198	132	264	396	528
10	8	16	24	16	32	48	64
15	1	2	3	2	4	6	8
LMSA3□(-Z) –LMSAC□ series attraction force. Unit: N							
Air gap (mm)	**LMSA31 LMSA31-Z**	**LMSA32 LMSA32-Z**	**LMSA33 LMSA33-Z**	**LMSA34**	**LMSAC3**	**LMSAC5**	
0	1.959	3.918	5.877	7.836	6.367	10.611	
0,3	1.680	3.360	5.040	6.720	5.460	9.100	
0,6	1.444	2.888	4.333	5.777	4.694	7.823	
0,9	1.245	2.490	3.735	4.980	4.046	6.744	
1,2	1.077	2.154	3.231	4.308	3.500	5.834	
1,5	936	1.872	2.808	3.744	3.042	5.070	
1,8	813	1.626	2.439	3.252	2.642	4.404	
2,1	708	1.416	2.124	2.832	2.301	3.835	
5	198	396	594	792	644	1.073	
10	24	48	72	96	78	130	
15	3	6	9	12	10	16	

3.2.2 LMFA series

○ Continuous force/peak force and air gap: Cover type

Fig. 3.4: LMFA with cover type Continuous force/peak force-air gap relationship graph

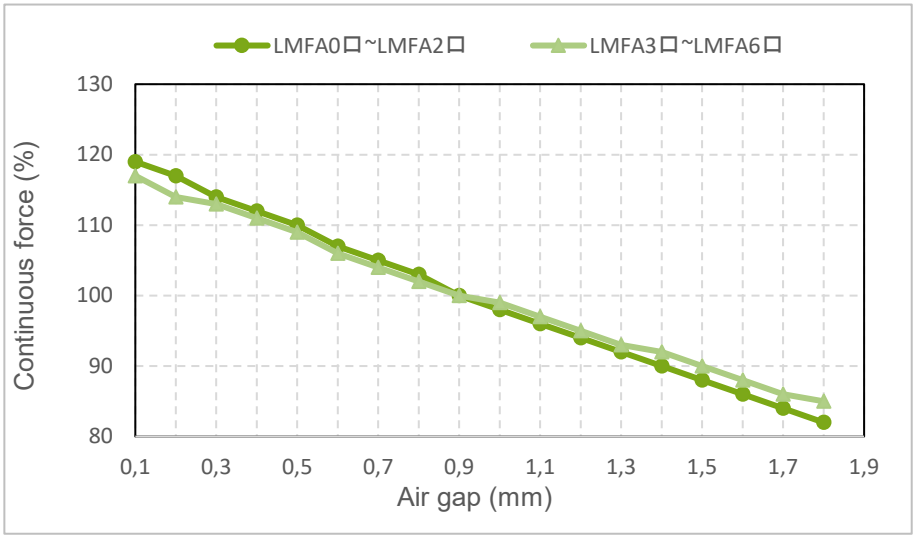

Table 3.3: LMFA with cover type Continuous force/peak force-air gap comparison chart

LMFA series continuous force/peak force (Cover type). Unit: %		
Air gap (mm)	**LMFA0□–LMFA2□**	**LMFA3□–LMFA6□**
0,1	119	117
0,2	117	114
0,3	114	113
0,4	112	111
0,5	110	109
0,6	107	106
0,7	105	104
0,8	103	102
0,9	100	100
1,0	98	99
1,1	96	97
1,2	94	95
1,3	92	93
1,4	90	92
1,5	88	90
1,6	86	88
1,7	84	86
1,8	82	85

○ Continuous force and air gap: Epoxy type

Fig. 3.5: Epoxy type LMFA stator Continuous force-air gap relationship graph

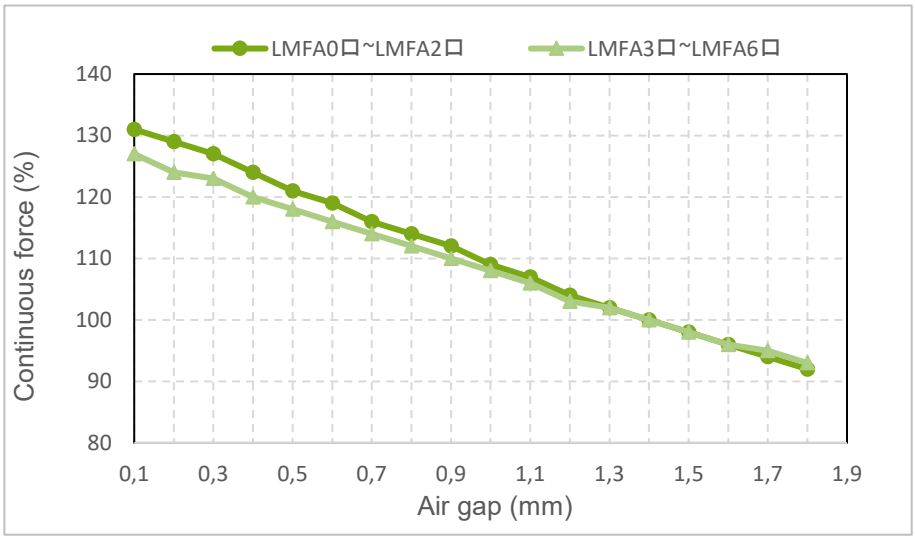

Table 3.4: Epoxy type LMFA stator Continuous force-air gap comparison chart

LMFA series Continuous force/peak force (Epoxy type). Unit: %		
Air gap (mm)	**LMFA0□–LMFA2□**	**LMFA3□–LMFA6□**
0,1	131	127
0,2	129	124
0,3	127	123
0,4	124	120
0,5	121	118
0,6	119	116
0,7	116	114
0,8	114	112
0,9	112	110
1,0	109	108
1,1	107	106
1,2	104	103
1,3	102	102
1,4	100	100
1,5	98	98
1,6	96	96
1,7	94	95
1,8	92	93

○ Attraction force and air gap: Cover type

Fig. 3.6: Cover type LMFA stator attraction force-air gap relationship graph

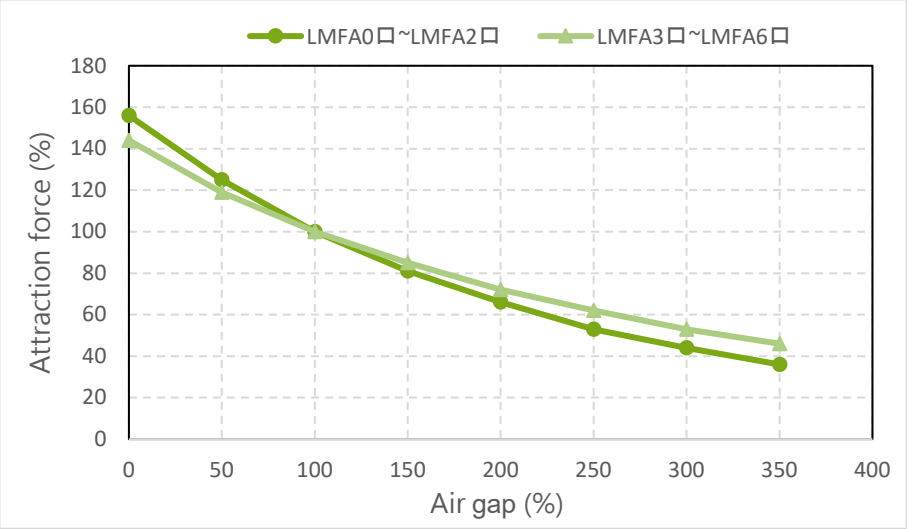

Table 3.5: Cover type LMFA0–2 stator attraction force-air gap comparison chart

LMFA0□–LMFA2□ series attraction force (Cover type). Unit: N											
Air gap (mm)	**LMFA01**	**LMFA02**	**LMFA03**	**LMFA11**	**LMFA12**	**LMFA13**	**LMFA14**	**LMFA21**	**LMFA22**	**LMFA23**	**LMFA24**
0	713	1.426	2.141	1.306	2.612	3.919	5.225	1.965	3.930	5.894	7.859
0,45	569	1.138	1.709	1.042	2.085	3.127	4.169	1.568	3.136	4.704	6.271
0,90	457	914	1.372	837	1.674	2.511	3.348	1.259	2.518	3.777	5.036
1,35	369	738	1.108	676	1.352	2.029	2.705	1.017	2.034	3.051	4.068
1,80	299	599	899	548	1.097	1.645	2.194	825	1.650	2.475	3.299
2,25	244	487	731	446	892	1.338	1.785	671	1.342	2.013	2.684
2,70	199	398	597	364	729	1.093	1.458	548	1.097	1.645	2.193
3,15	163	325	488	298	595	893	1.191	448	896	1.343	1.791
5	72	145	218	133	266	398	531	200	399	599	799
10	9	17	26	16	32	48	64	24	48	72	96
15	1	3	4	2	5	7	10	4	7	11	15
20	0	0	1	0	1	1	2	1	1	2	2

Table 3.6: LMFA3 – 6 with cover type attraction force-air gap comparison chart

LMFA3□–LMFA4□ series attraction force (Cover type). Unit: N								
Air gap (mm)	**LMFA31**	**LMFA32**	**LMFA33**	**LMFA34**	**LMFA41**	**LMFA42**	**LMFA43**	**LMFA44**
0	4.926	9.851	14.777	19.703	7.388	14.777	22.165	29.554
0,45	4.089	8.179	12.268	16.357	6.134	12.268	18.402	24.536
0,90	3.430	6.860	10.290	13.720	5.145	10.290	15.435	20.580
1,35	2.902	5.805	8.707	11.609	4.354	8.707	13.061	17.414
1,80	2.471	4.942	7.413	9.884	3.707	7.413	11.120	14.826
2,25	2.117	4.234	6.351	8.468	3.176	6.351	9.527	12.703
2,70	1.821	3.642	5.462	7.283	2.731	5.462	8.193	10.925
3,15	1.572	3.144	4.717	6.289	2.358	4.717	7.075	9.433
5	885	1.770	2.655	3.539	1.327	2.655	3.982	5.309
10	208	417	625	833	312	625	937	1.250
15	52	104	156	207	78	156	233	311
20	13	26	40	53	20	40	59	79

LMFA3□–LMFA4□ series attraction force (Cover type). Unit: N								
Air gap (mm)	**LMFA52**	**LMFA53**	**LMFA54**	**LMFA62**	**LMFA63**	**LMFA64**		
0	19.674	29.511	39.348	29.554	44.331	59.108		
0,45	16.333	24.500	32.667	24.536	36.804	49.072		
0,90	13.700	20.550	27.400	20.580	30.870	41.160		
1,35	11.593	17.389	23.185	17.414	26.121	34.828		
1,80	9.870	14.805	19.740	14.826	22.239	29.653		
2,25	8.456	12.684	16.912	12.703	19.054	25.405		
2,70	7.272	10.909	14.545	10.925	16.387	21.849		
3,15	6.280	9.419	12.559	9.433	14.150	18.866		
5	3.534	5.301	7.069	5.309	7.964	10.618		
10	832	1.248	1.664	1.250	1.874	2.499		
15	207	311	414	311	467	622		
20	53	79	105	79	119	158		

○ Attraction force and air gap: Epoxy type

Fig. 3.7: Epoxy type LMFA stator attraction force-air gap relationship graph

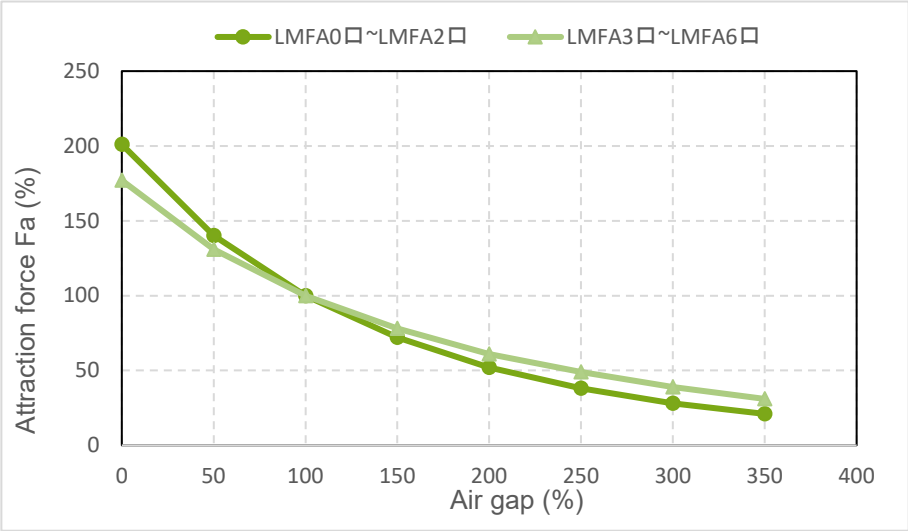

Table 3.7: Epoxy type LMFA0–2 stator attraction force-air gap comparison chart

LMFA3□–LMFA4□ series attraction force (Epoxy type). Unit: N											
Air gap (mm)	**LMFA01**	**LMFA02**	**LMFA03**	**LMFA11**	**LMFA12**	**LMFA13**	**LMFA14**	**LMFA21**	**LMFA22**	**LMFA23**	**LMFA24**
0	919	1.839	2.760	1.684	3.368	5.052	6.736	2.533	5.066	7.599	1.0132
0,7	641	1.282	1.925	1.174	2.349	3.523	4.697	1.766	3.533	5.299	7.066
1,4	457	914	1.372	837	1.674	2.511	3.348	1.259	2.518	3.777	5.036
2,1	329	659	988	603	1.206	1.809	2.412	907	1.814	2.721	3.628
2,8	239	478	718	438	876	1.314	1.752	659	1.318	1.976	2.635
3,5	175	350	525	320	640	960	1.280	482	963	1.445	1.926
4,2	129	257	386	236	472	707	943	355	709	1.064	1.419
4,9	95	189	284	173	346	520	693	261	521	782	1.042
10	11	22	33	20	40	60	79	30	60	90	119
15	1	3	4	3	5	8	11	4	8	12	16
20	0	0	0	0	0	0	0	0	0	0	0

Table 3.8: LMFA3–6 with epoxy type attraction force-air gap comparison chart

LMFA3□–LMFA4□ series attraction force (Cover type). Unit: N								
Air gap (mm)	**LMFA31**	**LMFA32**	**LMFA33**	**LMFA34**	**LMFA41**	**LMFA42**	**LMFA43**	**LMFA44**
0	6.069	12.138	18.206	24.275	9.103	18.206	27.310	36.413
0,7	4.494	8.989	13.483	17.978	6.742	13.483	20.225	26.966
1,4	3.430	6.860	10.290	13.720	5.145	10.290	15.435	20.580
2,1	2.663	5.326	7.988	10.651	3.994	7.988	11.982	15.977
2,8	2.098	4.195	6.293	8.391	3.147	6.293	9.440	12.586
3,5	1.665	3.330	4.995	6.660	2.497	4.995	7.492	9.989
4,2	1.335	2.670	4.005	5.340	2.002	4.005	6.007	8.010
4,9	1.076	2.152	3.228	4.304	1.614	3.228	4.842	6.456
10	245	490	734	979	367	734	1.102	1.469
15	61	122	184	245	92	184	275	367
20	15	31	46	62	23	46	69	93
30	0	0	0	0	0	0	0	0
LMFA5□–LMFA6□ series attraction force (Epoxy type). Unit: N								
Air gap (mm)	**LMFA52**	**LMFA53**	**LMFA54**	**LMFA62**	**LMFA63**	**LMFA64**		
0	24.240	36.360	48.480	36.413	54.619	72.826		
0,7	17.951	26.927	35.903	26.966	40.450	53.933		
1,4	13.700	20.550	27.400	20.580	30.870	41.160		
2,1	10.635	15.953	21.271	15.977	23.965	31.953		
2,8	8.379	12.568	16.757	12.586	18.880	25.173		
3,5	6.650	9.975	13.300	9.989	14.984	19.979		
4,2	5.332	7.998	10.664	8.010	12.014	16.019		
4,9	4.297	6.446	8.595	6.456	9.683	12.911		
10	978	1.467	1.956	1.469	2.203	2.938		
15	244	367	489	367	551	734		
20	62	92	123	93	139	185		
30	0	0	0	0	0	0		

3.2.3 LMFP series

- Continuous force/peak force and air gap: Cover type

Fig. 3.8: Cover type LMFP stator Continuous force-air gap relationship graph

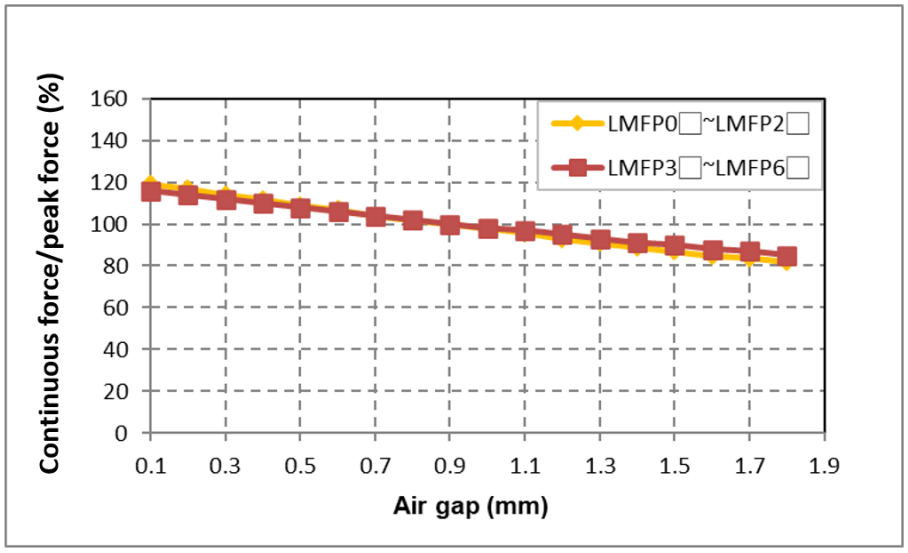

Table 3.9: Cover type LMFP stator Continuous force-air gap comparison chart

LMFP series Continuous force/peak force (Cover type). Unit: %		
Air gap (mm)	**LMFP0□–LMFP2□**	**LMFP3□–LMFP6□**
0,1	119	116
0,2	117	114
0,3	114	112
0,4	112	110
0,5	109	108
0,6	107	106
0,7	104	104
0,8	102	102
0,9	100	100
1,0	98	98
1,1	96	97
1,2	93	95
1,3	91	93
1,4	89	91
1,5	87	90
1,6	85	88
1,7	84	87
1,8	82	85

○ Continuous forcee and air gap: Epoxy type

Fig. 3.9: Epoxy type LMFP stator Continuous force-air gap relationship graph

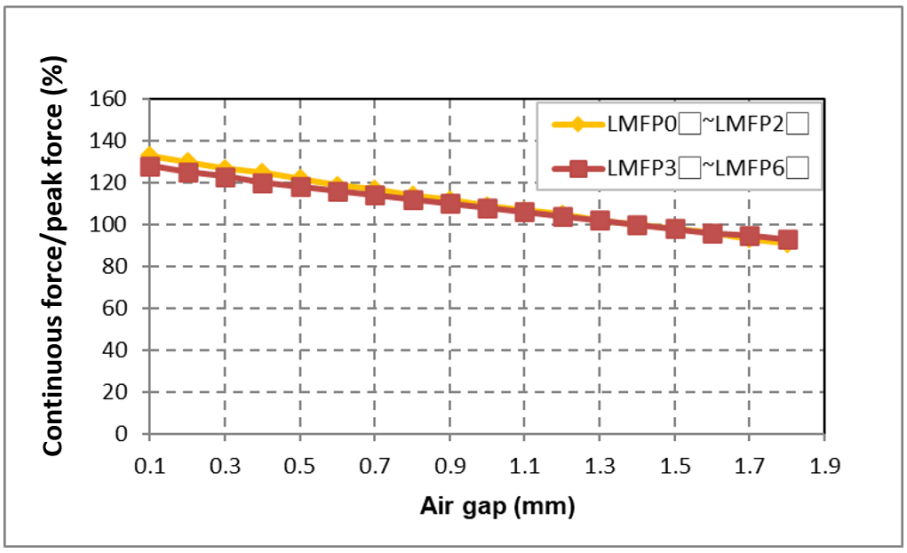

Table 3.10: Epoxy type LMFP stator Continuous force-air gap comparison chart

LMFP series Continuous force/peak force (Epoxy type). Unit: %		
Air gap (mm)	**LMFP0□–LMFP2□**	**LMFP3□–LMFP6□**
0,1	133	128
0,2	130	125
0,3	127	123
0,4	125	120
0,5	122	118
0,6	119	116
0,7	117	114
0,8	114	112
0,9	112	110
1,0	109	108
1,1	107	106
1,2	105	104
1,3	102	102
1,4	100	100
1,5	98	98
1,6	96	96
1,7	93	95
1,8	91	93

○ Attraction force and air gap: Cover type

Fig. 3.10: Cover type LMFP stator attraction force-air gap relationship graph

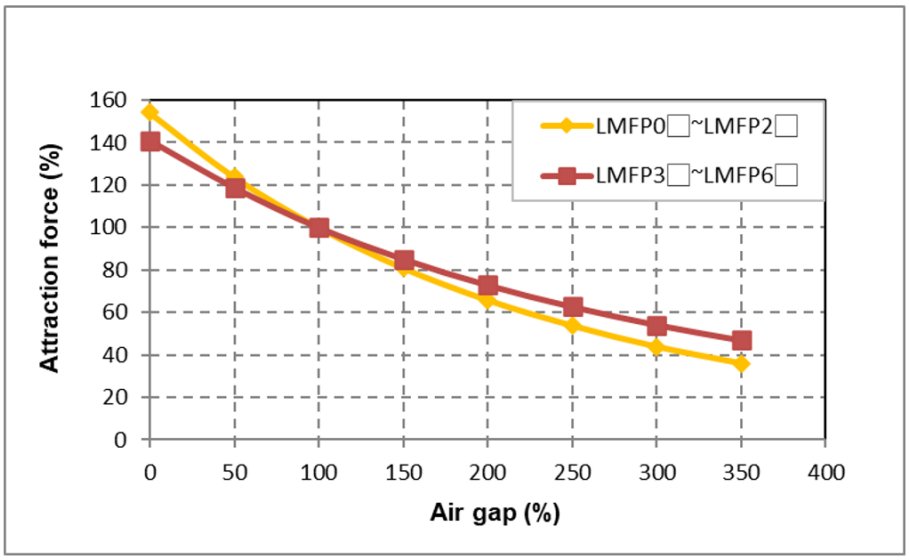

Table 3.11: Cover type LMFP0–2 stator attraction force-air gap comparison chart

LMFP0□–LMFP2□ series attraction force (Cover type). Unit: N											
Air gap (mm)	**LMFP01**	**LMFP02**	**LMFP03**	**LMFP11**	**LMFP12**	**LMFP13**	**LMFP14**	**LMFP21**	**LMFP22**	**LMFP23**	**LMFP24**
0	641	1.282	1.925	1.174	2.348	3.523	4.697	1.766	3.533	5.299	7.065
0,45	515	1.030	1.546	943	1.886	2.829	3.772	1.418	2.837	4.255	5.674
0,90	416	832	1.249	762	1.523	2.285	3.047	1.146	2.291	3.437	4.583
1,35	337	673	1.011	617	1.233	1.850	2.466	927	1.855	2.782	3.710
1,80	274	548	822	501	1.003	1.504	2.006	754	1.508	2.263	3.017
2,25	224	448	672	410	820	1.230	1.639	616	1.233	1.849	2.466
2,70	183	365	548	335	669	1.004	1.338	503	1.007	1.510	2.013
3,15	150	300	450	275	549	824	1.099	413	827	1.240	1.653
5	67	134	201	122	245	367	490	184	368	552	737
10	8	16	24	15	29	44	58	22	44	65	87
15	1	2	3	2	4	5	7	3	5	8	11
20	0	0	0	0	0	0	0	0	0	0	0

Table 3.12: Cover type LMFP3–6 stator attraction force-air gap comparison chart

LMFP3□–LMFP4□ series attraction force (Cover type). Unit: N								
Air gap (mm)	**LMFP31**	**LMFP32**	**LMFP33**	**LMFP34**	**LMFP41**	**LMFP42**	**LMFP43**	**LMFP44**
0	4.404	8.808	13.213	17.617	6.606	13.213	19.819	26.425
0,45	3.710	7.419	11.129	14.839	5.565	11.129	16.694	22.258
0,90	3.121	6.243	9.364	12.485	4.682	9.364	14.046	18.728
1,35	2.656	5.313	7.969	10.625	3.984	7.969	11.953	15.938
1,80	2.273	4.546	6.819	9.092	3.409	6.819	10.228	13.638
2,25	1.955	3.910	5.864	7.819	2.932	5.864	8.797	11.729
2,70	1.687	3.374	5.061	6.748	2.531	5.061	7.592	10.123
3,15	1.461	2.922	4.383	5.845	2.192	4.383	6.575	8.767
5	828	1.657	2.485	3.313	1.243	2.485	3.728	4.970
10	196	393	589	786	295	589	884	1.179
15	50	99	149	198	74	149	223	297
20	12	24	37	49	18	37	55	73
LMFP5□–LMFP6□ series attraction force (Cover type). Unit: N								
Air gap (mm)	**LMFP52**	**LMFP53**	**LMFP54**	**LMFP62**	**LMFP63**	**LMFP64**		
0	17.591	26.387	35.183	26.425	39.638	52.851		
0,45	14.814	22.226	29.635	22.258	33.388	44.517		
0,90	12.467	18.701	24.934	18.728	28.092	37.456		
1,35	10.610	15.914	21.219	15.938	23.906	31.875		
1,80	9.079	13.618	18.157	13.638	20.457	27.276		
2,25	7.808	11.712	15.616	11.729	17.593	23.458		
2,70	6.739	10.108	13.477	10.123	15.184	20.245		
3,15	5.836	8.754	11.672	8.767	13.150	17.534		
5	3.309	4.963	6.617	4.970	7.455	9.940		
10	785	1.177	1.569	1.179	1.768	2.357		
15	198	297	396	297	446	595		
20	49	73	97	73	110	146		

○ Attraction force and air gap: Epoxy type

Fig. 3.11: Epoxy type LMFP stator attraction force-air gap relationship graph

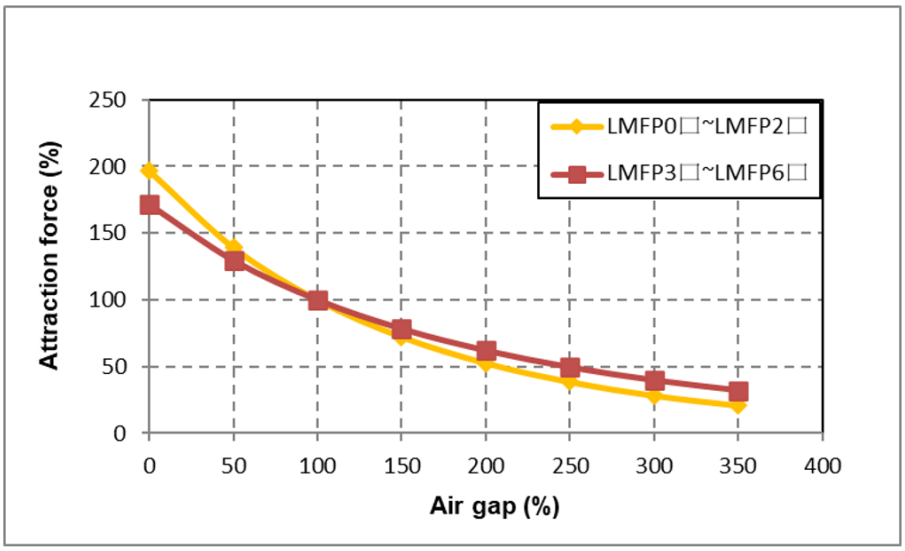

Table 3.13: Epoxy type LMFP0–2 stator attraction force-air gap comparison chart

LMFP0□–LMFP2□ series attraction force (Epoxy type). Unit: N											
Air gap (mm)	**LMFP01**	**LMFP02**	**LMFP03**	**LMFP11**	**LMFP12**	**LMFP13**	**LMFP14**	**LMFP21**	**LMFP22**	**LMFP23**	**LMFP24**
0	818	1.637	2.457	1.499	2.996	4.495	5.994	2.255	4.507	6.762	9.016
0,7	579	1.158	1.739	1.061	2.120	3.181	4.242	1.595	3.189	4.785	6.380
1,4	416	832	1.249	762	1.523	2.285	3.047	1.146	2.291	3.437	4.583
2,1	301	603	905	552	1.103	1.655	2.207	830	1.659	2.489	3.319
2,8	220	439	660	402	804	1.207	1.609	605	1.210	1.815	2.420
3,5	161	322	483	295	589	884	1.179	443	886	1.330	1.773
4,2	119	237	356	217	434	651	868	327	653	979	1.306
4,9	88	175	263	160	321	481	641	241	482	723	965
10	10	21	31	19	38	57	76	28	57	85	114
15	2	3	5	3	6	9	12	4	9	13	18
20	0	0	0	0	0	0	0	0	0	0	0

Table 3.14: LMFP3–6 with epoxy type attraction force-air gap comparison chart

LMFP3□–LMFP4□ series attraction force (Epoxy type). Unit: N								
Air gap (mm)	**LMFP31**	**LMFP32**	**LMFP33**	**LMFP34**	**LMFP41**	**LMFP42**	**LMFP43**	**LMFP44**
0	5.355	10.713	16.068	21.424	8.034	16.068	24.102	32.136
0,7	4.044	8.089	12.133	16.177	6.067	12.133	18.200	24.266
1,4	3.121	6.243	9.364	12.485	4.682	9.364	14.046	18.728
2,1	2.444	4.888	7.332	9.776	3.666	7.332	10.998	14.664
2,8	1.936	3.872	5.807	7.743	2.904	5.807	8.711	11.615
3,5	1.545	3.091	4.636	6.181	2.318	4.636	6.954	9.272
4,2	1.241	2.483	3.725	4.966	1.862	3.725	5.587	7.450
4,9	1.004	2.009	3.013	4.017	1.506	3.013	4.519	6.026
10	974	1.949	2.923	3.898	1.462	2.923	4.385	5.847
15	230	460	689	919	345	689	1.034	1.379
20	57	114	171	228	85	171	256	342
30	15	30	45	60	22	45	67	90
LMFP5□–LMFP6□ series attraction force (Epoxy type). Unit: N								
Air gap (mm)	**LMFP52**	**LMFP53**	**LMFP54**	**LMFP62**	**LMFP63**	**LMFP64**		
0	21.393	32.090	42.786	32.136	448.205	64.273		
0,7	16.154	24.231	32.307	24.266	36.399	48.532		
1,4	12.467	18.701	24.934	18.728	28.092	37.456		
2,1	9.762	14.643	19.523	14.664	21.996	29.328		
2,8	7.732	11.598	15.463	11.615	17.422	23.229		
3,5	6.172	9.258	12.344	9.272	13.907	18.543		
4,2	4.959	7.439	9.918	7.450	11.175	14.899		
4,9	4.011	6.017	8.023	6.026	9.039	12.052		
10	3.892	5.838	7.784	5.847	8.770	11.693		
15	918	1.377	1.836	1.379	2.068	2.758		
20	228	341	455	342	513	684		
30	60	90	119	90	135	179		

3.2.4 LMSC series

○ Attraction force and air gap

Fig. 3.12: LMSC attraction force-air gap relationship graph

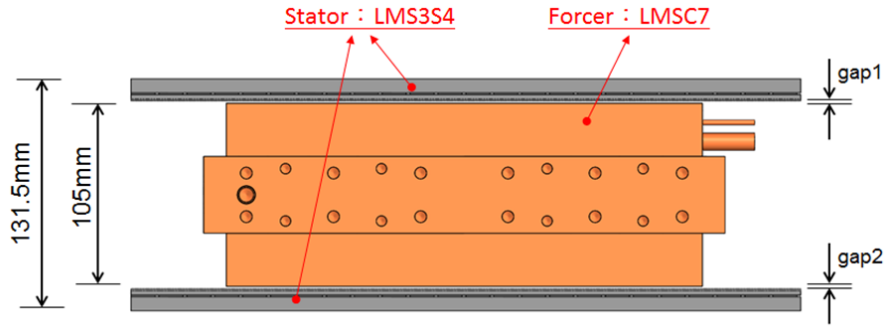

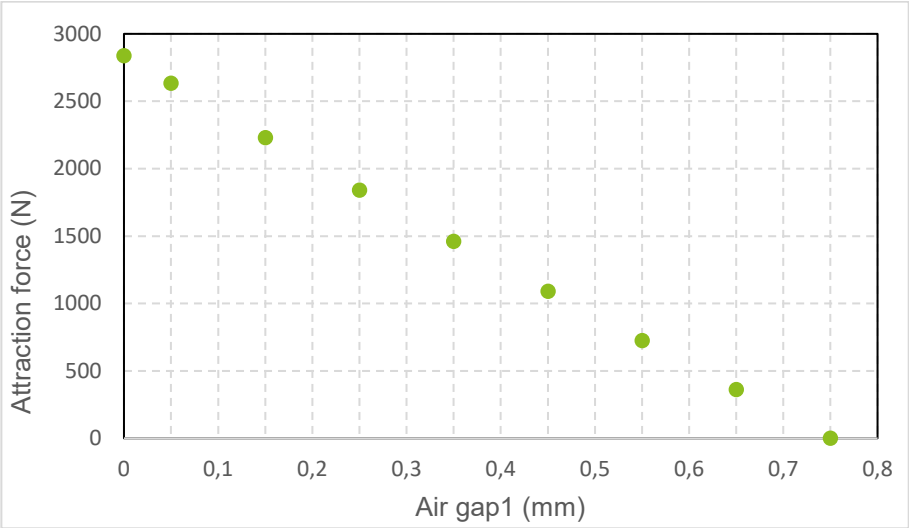

Table 3.15: LMSC attraction force-air gap comparison chart

Series	LMSC7(L) (WC)								
Air gap 1 (mm)	0	0,05	0,15	0,25	0,35	0,45	0,55	0,65	0,75
Air gap 2 (mm)	1,5	1,45	1,35	1,25	1,15	1,05	0,95	0,85	0,75
Attracting force (N)	2.838	2.633	2.230	1.840	1.464	1.090	724	361	0

3.3 Environmental temperature and Continuous force

HIWIN linear motor Continuous force is defined based on the Maximum winding temperature of such series motors reached under the environmental temperature of 25 °C. When the operating environmental temperature exceeds 25 °C, the Continuous force achievable by the motor is reduced. Under different environmental temperatures, the Continuous force that can be achieved without having the motor exceeding the Maximum winding temperature under different environmental temperatures can be calculated from the following formula.

$$\frac{T_{max} - T_{amb}}{T_{max} - T_0} = \frac{{F_x}^2}{{F_C}^2}$$

T_{max} : Maximum winding temperature (catalog value) [°C]

T_{amb}: Environmental temperature [°C]

T_0 : Motor initial temperature [°C], water-cooling T_0 = 20 °C, natural-cooling T_0 = 25 °C

F_C : Continuous force (catalog value) [N]

F_x : Achievable Continuous force under different environmental temperatures [N]

The relationship between different environmental temperatures and achievable Continuous force is as shown in Fig. 3.13 and Fig. 3.14

Fig. 3.13: Environmental temperature vs. Continuous force relationship graph with natural-cooling motor

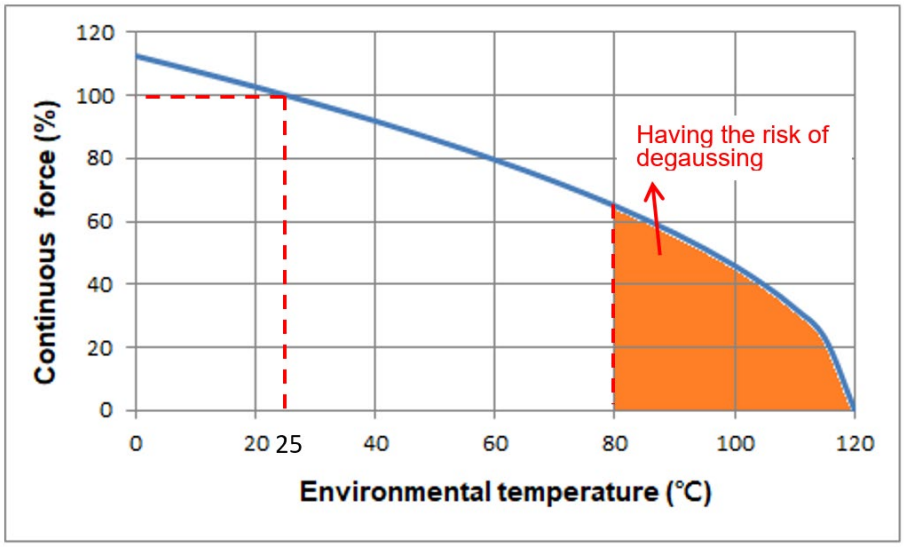

Fig. 3.14: Environmental temperature vs. Continuous force relationship graph with water-cooling motor

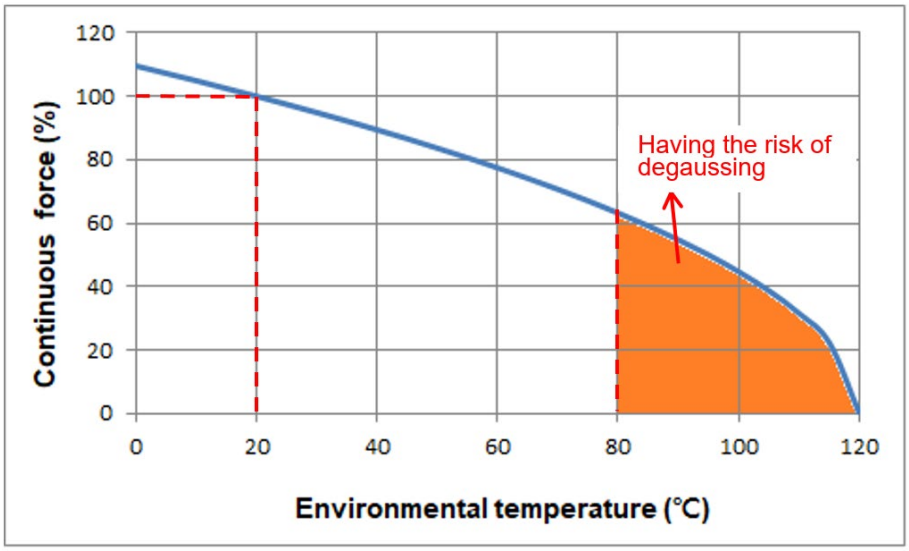

3.4 Motor heat calculation

3.4.1 Motor heat loss

During the process of converting electrical energy into kinetic energy of a motor, it is inevitable that copper loss, iron loss and mechanical loss also occur; where copper loss refers to the loss caused by the resistance as current passes through the motor forcer coil; iron loss is caused by the magnetic field conversion between the forcer and stator magnets; and mechanical loss is, in general, far less than the copper and iron losses such that it can be omitted.

The copper loss calculation method under the continuous force is:

$$P_C = \frac{3}{2} \times R_{25} \times \{1 + [0.00393 \times (T_{max} - 25)]\} \times {I_C}^2$$

P_C: Copper loss when the coil temperature is T_{max} [W]

R_{25}: Line-to-line resistance when the coil temperature is 25°C [Ω]

I_c: Continuous current when the coil temperature is T_{max} A_{rms}

T_{max} : Maximum winding temperature [°C] (please refer to the catalog of each series motor)

Heat loss mainly utilizes the thermal conduction method to transfer the loss of the coil to the motor surface. In an example of natural air cooling, the heat loss source is transferred to the external environment via heat convection from the motor surface in contact with the air, and the heat is further transferred away through heat radiation and thermal conduction from the installation surface of customers. In an example of water-cooling, the heat loss source utilizes thermal conduction to transfer heat from the heat source center to the cooling water, and since cooling water has a heat convection coefficient much higher than that of air, the effect of heat transfer from the heat source to the air via convection can be omitted. The cooling method for LMFA series motors can use the water-cooling or air-cooling type. Please ensure that the parameters used are the same as the ones indicated in the specification, and please also be aware that the Maximum winding temperature shall not exceed 120 °C.

3.4.2 Continuous operating temperature

The motor coil steady-state temperature is defined based on the ratio of copper and iron losses. When a linear motor is used, iron loss can be omitted. The motor total loss and rated Continuous force (F_e) are both defined according to the Maximum winding temperature specified in the catalog. When an equivalent thrust force (F_c) is smaller than the rated Continuous force (F_c), the steady-state temperatures of the motor coil under different operational conditions can be obtained from the following formula.

When the operating current is lower than the rated current ($I_e \leq I_c$), its relationship between temperature and thrust force is

$$T_e = T_{amb} + \left(\frac{F_e}{F_C}\right)^2 \times (T_{max} - 25)$$

T_e: Coil steady-state temperature under equivalent thrust force [°C]

T_{amb}: Environmental temperature [°C]

F_e: Equivalent thrust force of actual operation [N] (when coil temperature is T_e)

F_c: Rated Continuous force [N] (when the coil temperature is T_{max})

3.4.3 Thermal time constant

During the operating process of a motor, its coil temperature is related to the thermal time constant. The thermal time constant is defined to be the time (as shown in Fig. 3.15) when the temperature difference between the coil initial temperature T_0 and the Maximum winding temperature T_{max} reached is 63 %. The time for the motor to reach the steady state is approximately 5 times the thermal time constant t_{Th}.

Fig. 3.15: Motor temperature increase curve graph

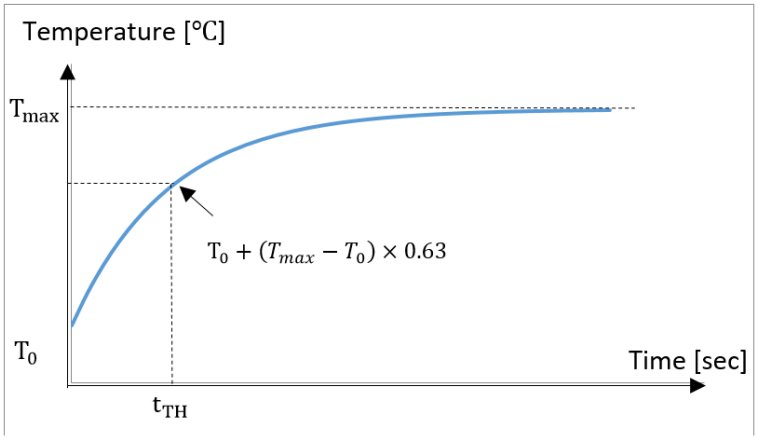

The equation between the thermal time constant and temperature is

$$T(t) = T_0 + (T_{max} - T_0) \times \left(1 - e^{-\left(\frac{t}{t_{TH}}\right)}\right)$$

$T(t)$: Coil temperature [°C] (at operating time t)

T_0: Coil initial temperature [°C]

T_{max}: Maximum winding temperature [°C]

t_{TH}: Thermal time constant [sec] (please refer to catalog for each series motor)

t: Operating time [sec]

When the operating current is between the rated current and peak current ($I_c < I_e < I_p$), it is necessary to set up the power off idleness time to allow the motor to cool down. In addition, the aforementioned thermal time constant can be used for calculating the time required for the load cycle. First, according to Section 3.4.3, the equivalent thrust force of actual operation (F_e) is used to obtain the coil steady-state temperature (T_e) value under the equivalent thrust force, following which the following equation is then used to obtain the relative maximum operating time.

The equation for the coil steady-state temperature (T_e) under the equivalent thrust force and the maximum operating time is

$$t = -t_{TH} \times \ln\left(1 - \frac{T_e - T_0}{T_{max} - T_0}\right)$$

t: Maximum operating time [sec]

Note:

The coil temperature (T_e) of the equivalent current described here shall not exceed the Maximum winding temperature (T_{max}) specified in the catalog.

3.5 Cooling system calculation

⚠ Warning! Risk related to working temperature.

When incorrectly operated and in the case of a fault, the motor can overheat resulting in fire and smoke. This can result in severe injury or death. Further, excessively high temperatures destroy motor components and result in increased failures as well as shorter service lives of motors

- Operate the motor according to the relevant specifications.
- Allow the forcer to cool down sufficiently (in a 25 °C room temperature) before working around the product to avoid burns.
- When an abnormal smell, noise, smoke, or vibration is detected, please turn off the power immediately.

The motor cooling system mainly utilizes the motor Maximum dissipated heat output, minimum flow rate of coolant, pressure difference between coolant inlet and an outlet and the temperature difference between the coolant inlet and outlet for calculation. During operation, performing design and selection of a cooling system according to the catalog value is able to allow the motor to achieve optimal performance. If the equivalent thrust force of the motor actual operation is lower than the Continuous force indicated in the catalog, under the condition where the motor is permitted to operate at a higher temperature (but not exceeding the Maximum winding temperature of 120 °C), its coolant flow rate may be reduced lower to prevent excessive consumption of pumping work. The cooling condition can be adjusted appropriately according to the following formula.

The following formula can be used to adjust the water-cooling system boundary condition according to different motor power losses: Under the user's operational condition where the equivalent thrust force is smaller than the Continuous force (Fe<Fc), to determine the coolant flow rate required to be adjusted at the customer end, the following equation can be used to solve the coolant flow rate corresponding to the equivalent thrust force.

$$Q_{P,H,e} = \frac{Q_{P,H,MAX}}{(F_c/F_e)^2}$$

$$Q_{P,H,e} = 69.7 \times q_e \times \Delta T$$

where

$Q_{P,H,e}$: Motor total loss under the equivalent thrust force [W]

$Q_{P,H,MAX}$: Maximum dissipated heat output [W]

ΔT: Temperature difference between inlet and outlet [°C]

q_e: Coolant flow rate under the equivalent thrust force [L/min]

F_c : Continuous force (catalog value) [N]

F_e : Equivalent thrust force of actual operation [N]

The relationship between the coolant flow rate and the temperature difference of inlet and outlet is as shown in Fig. 3.16, and the relationship between the pressure difference of inlet and outlet and the flow rate is as shown in Fig. 3.17.

Fig. 3.16: Coolant flow rate and temperature difference of inlet and outlet relationship graph

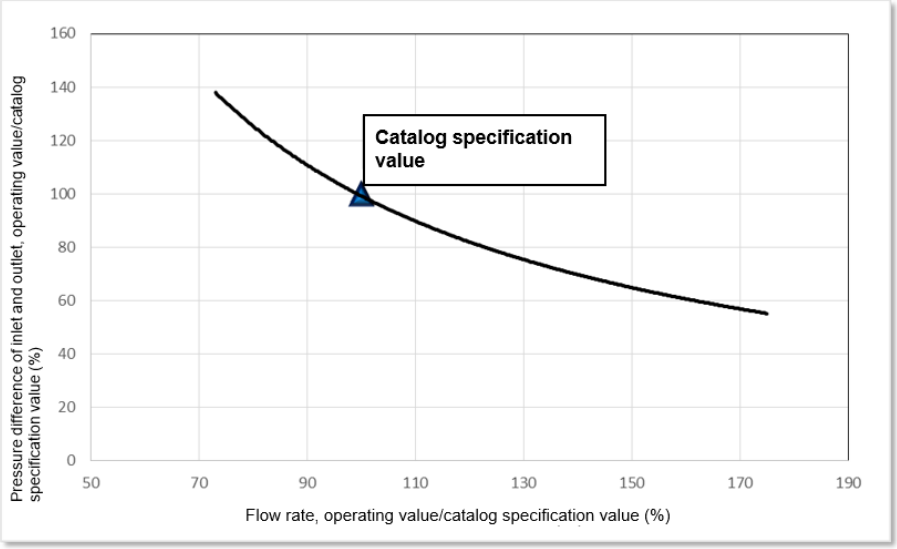

Fig. 3.17: Pressure difference of inlet and outlet and flow rate relationship graph

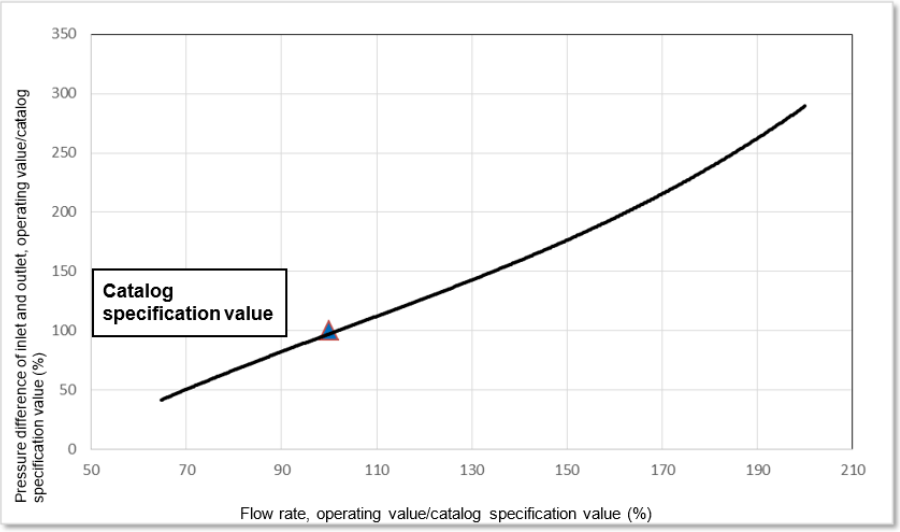

3.6 Cooling machine selection

For the selection of a cooling machine, in addition to the consideration of the use scope of the power source and coolant, it mainly refers to the selection of the cooling power and flow rate. It is recommended to select a cooling machine capable of allowing the motor to achieve maximum performance according to the catalog value, or the calculation value of the cooling system described in Section 3.5 can be used as a reference for the selection.

3.6.1 Cooling power selection

The following provides an example. If two linear motors of LMFA31 are used, and the Maximum dissipated heat output indicated in the catalog specification is 324 (W), then the sum of the Maximum dissipated heat output of the two motors is 2 × 324 = 648 (W). By using the cooling machine of than the motor Maximum dissipated heat output of 648 (W) as an example, under 50Hz, the cooling capacity is 980 (W), which is greater

Cooling capacity	KCAL/H 50/60 Hz	450/500	840/1.000	1.400/1.500	1.700/2.100	2.600/3.000	3.200/3.800
	W 50/60 Hz	525/580	980/1.170	1.630/1.750	1.980/2.450	2.900/3.500	3.700/4.400
	BTU/H 50/60 Hz	1.800/2.000	3.360/4.000	5.600/6.000	6.800/8.400	10.000/12.000	12.800/15.200
Temperature control	A	Fixed type (setting range of 10 – 40 °C)					
	B	Temperature difference type/machine body temperature tracking type, setting range of −10 – +10 °C)					
Scope of use	Room temperature	10 – 40 °C					
	Oil temperature	10 – 30 °C					
Power		3⦶200–230 V 50/60Hz					
Motor (W)	Compressor	460			740	1.135	1.450
	Fan	56	50	95		180	
	Pump	120	750				
Pump flow (L/min)	50 Hz	2	40				
	60 Hz	3,5	50				

LMFA3 series specification	Symbol	Unit	LMFA31	LMFA31L
Continuous force	F_c	N	380	380
Continuous Current	I_c	A (rms)	3,1	4,6
Continuous force (WC)	F_c (wc)	N	759	759
Continuous current (WC)	I_c (wc)	A (rms)	6,2	9,1
Peak force (1 second)	F_p	N	1.750	1.750
Peak current (1 second)	Ip	A (rms)	19,2	28,3
Force constant	Kf	N/A (rms)	122,7	83,1
Attraction force	F_a	N	3.430	3.430
Maximum winding temperature	T_{max}	°C		
Electrical time constant	K_e	ms	11,3	11,4
Resistance (line-to-line, 25°C)	R_{25}	Ω	4,3	1,9
Resistance (line-to-line, 120°C)	R_{120}	Ω	5,6	2,6
Inductance (line-to-line)	L	mH	48,3	22,2
Pole pair distance	2τ	mm		
Back EMF constant (line-to-line)	K_v	Vrms (m/s)	70,9	48,0
Motor constant (25°C)	K_m	N/√W	48,4	48,7
Thermal resistance	R_{th}	°C/W	1,17	1,19
Thermal resistance (WC)	R_{th} (wc)	°C/W	0,29	0,30
Minimum flow rate	-	L/min	4,0	4,0
Temperature of cooling water	-	°C		
Thermal sensor switch	-			
Maximum speed of Peak force	V_{max}, F_{max}	m/s	4,08	6,19
Maximum output power	PEL, MAX	W	10.255	13.910
Maximum dissipated heat output	$Q_{P, H, MAX}$	W	324	320
Locked-rotor torque (water-cooling)	F_e	N	531	531
Stall current (water-cooling)	I0	A (rms)	4,3	6,4

Table 3.16: Cooling machine power selection

Cooling capacity	KCAL/H 50/60 Hz	450/500	840/1.000	1.400/1.500	1.700/2.100	2.600/3.000	3.200/3.800
	W 50/60 Hz	525/580	980/1.170	1.630/1.750	1.980/2.450	2.900/3.500	3.700/4.400
	BTU/H 50/60 Hz	1.800/2.000	3.360/4.000	5.600/6.000	6.800/8.400	10.000/12.000	12.800/15.200
Temperature control	A	Fixed type (setting range of 10 – 40°C)					
	B	Temperature difference type/machine body temperature tracking type, setting range of −10 – +10°C)					
Scope of use	Room temperature	10 – 40 °C					
	Oil temperature	10 – 30 °C					
Power		3⦶200–230 V 50/60 Hz					
Motor (W)	Compressor	460			740	1.135	1.450
	Fan	56	50	95		180	
	Pump	120	750				
Pump flow (L/min)	50 Hz	2	40				
	60 Hz	3,5	50				

3.6.2 Flow rate selection

When the cooling machine is under the selected frequency (50/60 Hz), the pump flow rate shall be greater than the sum of the motor minimum flow rate, and the pressure generated by the pump flow rate shall be greater than the sum of the pressure drop of the motor internal cooling loop. If the cooling loop of large equipment is longer, then it is necessary to consider the pressure drop caused by the loop pipe resistance.

The following provides an example. If two linear motors of LMFA31 are used, and the minimum flow rate indicated in the catalog specification is 4.0 (L/min), then the sum of the minimum flow rate of the two motors is 2 × 4,0 = 8,0 (L/min). By using the cooling machine of Table 3.16 as an example, the pump flow rate at 50 Hz is 40 (L/min), which is greater than the motor minimum flow rate of 8,0 (L/min).

LMFA3 series specification	Symbol	Unit	LMFA31	LMFA31L
Continuous force	F_c	N	380	380
Continuous Current	I_c	A (rms)	3,1	4.6
Continuous force (WC)	F_c (wc)	N	759	759
Continuous current (WC)	I_c (wc)	A (rms)	6,2	9,1
Peak force (1 second)	F_p	N	1.750	1.750
Peak current (1 second)	Ip	A (rms)	19,2	28,3
Force constant	Kf	N/A (rms)	122,7	83,1
Attraction force	F_a	N	3.430	3.430
Maximum winding temperature	T_{max}	°C		
Electrical time constant	K_e	ms	11,3	11,4
Resistance (line-to-line, 25°C)	R_{25}	Ω	4,3	1,9
Resistance (line-to-line, 120°C)	R_{120}	Ω	5,6	2,6
Inductance (line-to-line)	L	mH	48,3	22,2
Pole pair distance	2τ	mm		
Back EMF constant (line-to-line)	K_v	Vrms (m/s)	70,9	48,0
Motor constant (25°C)	K_m	N/√W	48,4	48,7
Thermal resistance	R_{th}	°C/W	1,17	1,19
Thermal resistance (WC)	R_{th} (wc)	°C/W	0,29	0,30
Minimum flow rate	-	L/min	4,0	4,0
Temperature of cooling water	-	°C		
Thermal sensor switch	-			
Maximum speed of Peak force	V_{max}, F_{max}	m/s	4,08	6,19
Maximum output power	PEL, MAX	W	10.255	13.910
Maximum dissipated heat output	$Q_{P, H, MAX}$	W	324	320
Locked-rotor torque (water-cooling)	F_e	N	531	531
Stall current (water-cooling)	I0	A (rms)	4,3	6,4

Table 3.16: Cooling machine flow rate selection

Cooling capacity	KCAL/H 50/60 Hz	450/500	840/1.000	1.400/1.500	1.700/2.100	2.600/3.000	3.200/3.800
	W 50/60 Hz	525/580	980/1.170	1.630/1.750	1.980/2.450	2.900/3.500	3.700/4.400
	BTU/H 50/60 Hz	1.800/2.000	3.360/4.000	5.600/6.000	6.800/8.400	10.000/12.000	12.800/15.200
Temperature control	A	Fixed type (setting range of 10 – 40 °C)					
	B	Temperature difference type/machine body temperature tracking type, setting range of −10 – +10 °C)					
Scope of use	Room temperature	10 – 40 °C					
	Oil temperature	10 – 30 °C					
Power		3⦶200–230 V 50/60 Hz					
Motor (W)	Compressor	460			740	1.135	1.450
	Fan	56	50	95		180	
	Pump	120	750				
Pump flow (L/min)	50 Hz	2	40				
	60 Hz	3,5	50				

The above briefly describes the selection of a cooling machine. For any questions on the selection of a cooling machine, it is recommended to provide the above information to a cooling machine manufacturer for further discussion.

4 Motor Mechanical Interface

4.1 Iron core linear motor assembly interface

Observe dimension of the gap between forcer and stator after assembly. It will impact linear motor performance and reliability. A well-designed positioning stage and proper tolerance value will improve the stability of products. The sectional view of typical linear motor stage base and the suggested tolerance value are shown as below. The flatness of the installation interface with stator should be 0,02 mm per 300 mm (as Fig. 4.1 shows).

Fig. 4.1: Sectional view of base design

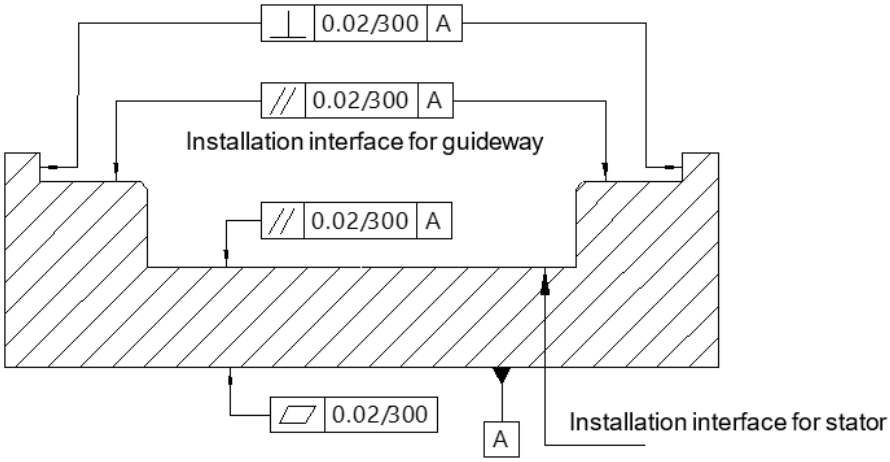

Observe the assembly total height H and the air gap dimensions between the forcer and stator G after assembly, they will impact the linear motor performance and reliability (please refer to the air gap specification of each series motor). There are two types of stators: stainless cover version and epoxy version.

Forcer and stator of an iron-core linear motor have an immense magnetic attraction with each other (refer to linear motor catalog F_a of each series for the attraction value). Hence, when designing the installation interfaces of both forcer and stator, we must consider and compute the deformation due to the attraction to ensure the height of the total composition H and air gap between the forcer and stator G can be maintained. Should there be any circumstance of a bad air gap G caused by structural deformation, or interferential damage of forcer and stator, HIWIN shall not be responsible for repairs or adjustments free of charge.

4.1.1 LMSA iron core linear motor series

Fig. 4.2: LMSA iron core linear motor assembly

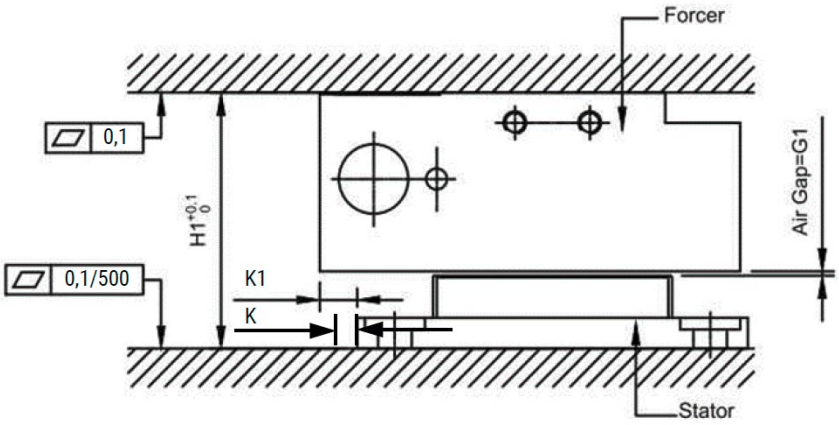

Table 4.1: LMSA iron core linear motor assembly dimensions

Model	Dimensions (mm)				
	H1	K	K1	G1	
		LMSAxSxEA Epoxy Version	LMSAxSx Cover Version	Stainless cover	Epoxy
LMSA1□ LMSA1□-Z	34	5	5,7	0,6 +0.35/-0.25	0,6 ±0.25
LMSA2□ LMSA2□-Z	34	3	3,7		
LMSA3□ LMSA3□-Z	36	3	3,7		
LMSAC□	36	1,75	4,25		

4.1.2 LMFA water-cooling linear motor series

Note:

- The precision water-cooling installation dimensions are not included.
- When measure the width of Forcer, since the epoxy could expand or contract with temperature changes, as below pictures Fig. 4.3, it is recommended that the mounting surface of LMFA forcer be the measured surface.

Fig. 4.3: LMFA water-cooling linear motor assembly

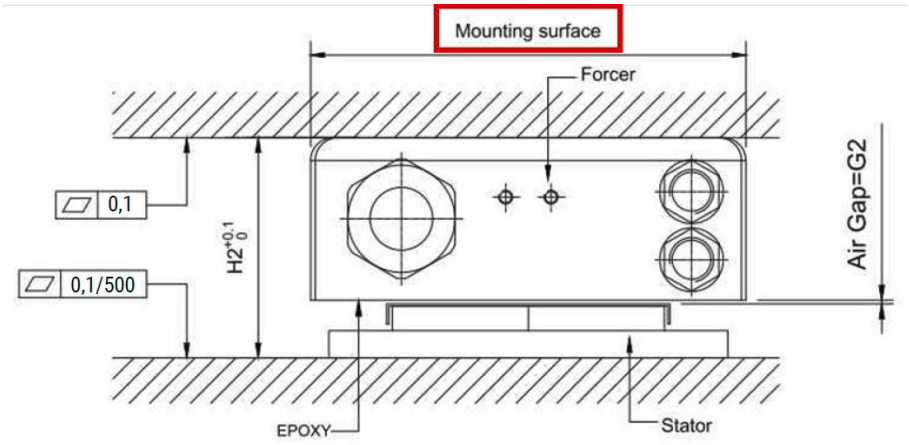

Fig. 4.4: LMFP water-cooling linear motor assembly

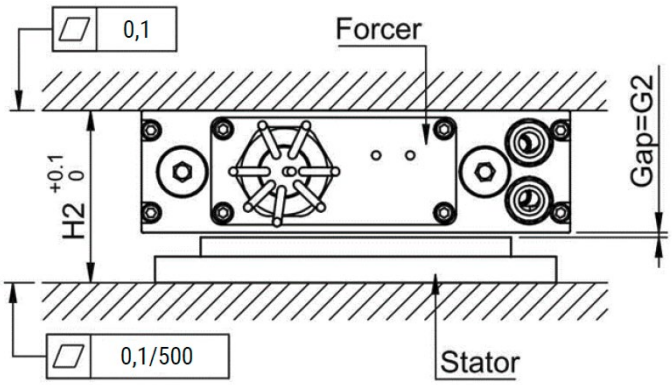

Table 4.2: LMFA/LMFP water-cooling linear motor assembly dimensions

Model	Dimensions (mm)		
	H2	G2	
		Stainless cover	Epoxy
LMFA0□	48,5	0,9 ±0.2	1,4 ±0.2
LMFA1□	48,5		
LMFA2□/LMFP2□	50,5		
LMFA3□/LMFP3□	64,1		
LMFA4□/LMFP4□	66,1		
LMFA5□/LMFP5□	64,1		
LMFA6□/LMFP6□	66,1		

Note:
The LMFC precision water-cooling installation dimensions are included.

Fig. 4.5: LMFA precision water-cooling linear motor assembly

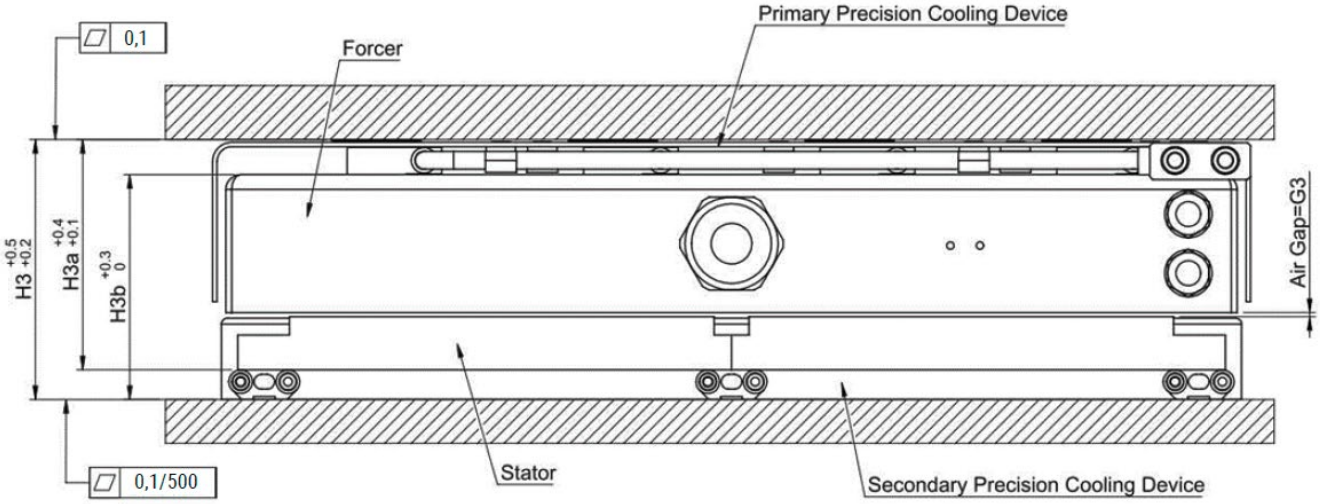

Fig. 4.6: LMFP precision water-cooling linear motor assembly

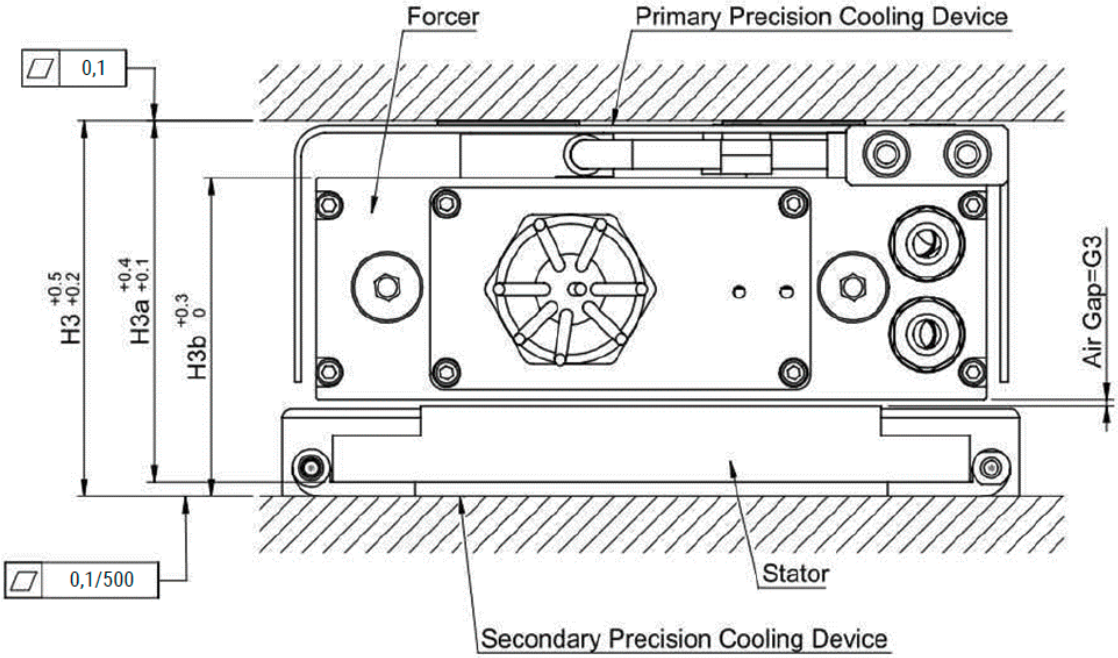

Table 4.3: LMFA/LMFP precision water-cooling linear motor assembly dimensions

Model	Dimensions (mm)				
	H3	H3a	H3b	G3	
				Stainless cover	Epoxy
LMFA0□	-				
LMFA1□					
LMFA2□					
LMFA3□/LMFP3□	79,0	76	67,1	0,9 ±0.5	1,4 ±0.5
LMFA4□/LMFP4□	81,0	78	69,1		
LMFA5□/LMFP5□	86,0	76	74,1		
LMFA6□/LMFP6□	88,0	78	76,1		

Note:

- H3: Contain forcer, stator, precision cooling device system for the forcer and stator.
- H3a: Contain forcer, stator and precision cooling device system for forcer.
- H3b: Contain forcer, stator and precision cooling device system for stator.

4.1.3 LMSC double thrust linear motor series

Fig. 4.7: LMSC double thrust linear motor assembly

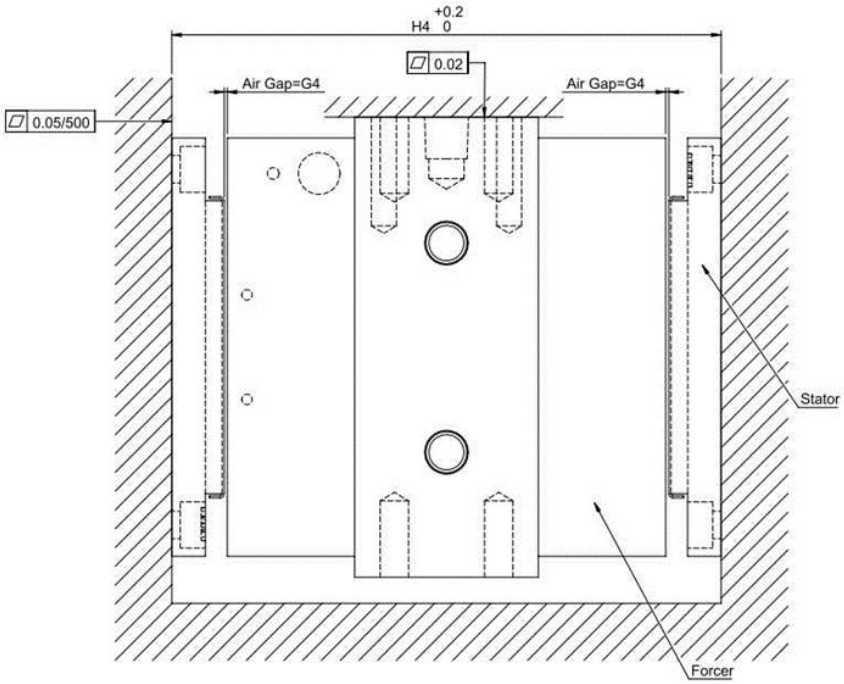

Table 4.4: LMSC double thrust linear motor assembly dimensions

Model	Dimensions (mm)	
	H4	G4
LMSC7	131,5	0,75 +0,35/-0,2

4.1.4 LMSS iron core linear motor series

Fig. 4.8: LMSS iron core linear motor assembly

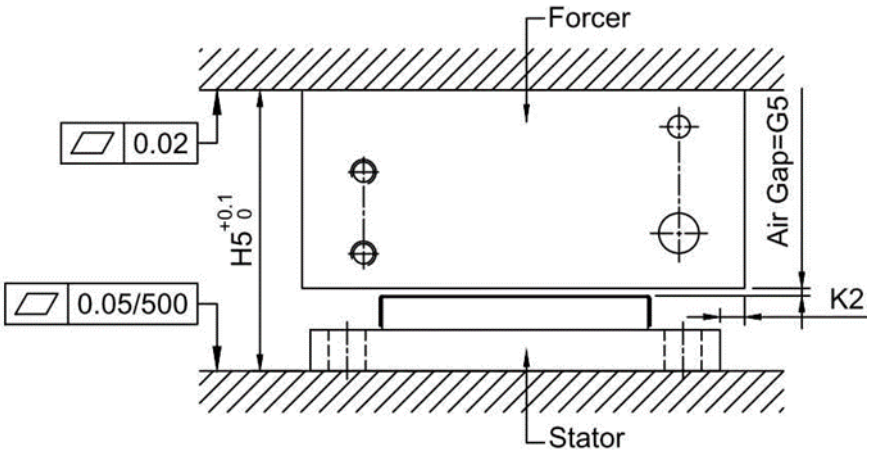

Table 4.5: LMSS iron core linear motor assembly dimensions

Model	Dimensions (mm)		
	H5	K2	G5
LMSS11	34,3	3	0,9 +0,3/-0,35

4.2 Ironless linear motor (LMC) mechanical installation interface

For the installation surface (datum plane A) of a ironless linear motor fastened with a stator assembly, the recommended plane precision is 0,02 mm/300 mm; for the installation plane fastening with a forcer assembly, the recommended plane precision is 0,02 mm/300 mm, and it is parallel to the datum plane A, and the parallel precision is 0,02 mm/300 mm.

Fig. 4.9: Ironless linear motor installation interface assembly precision

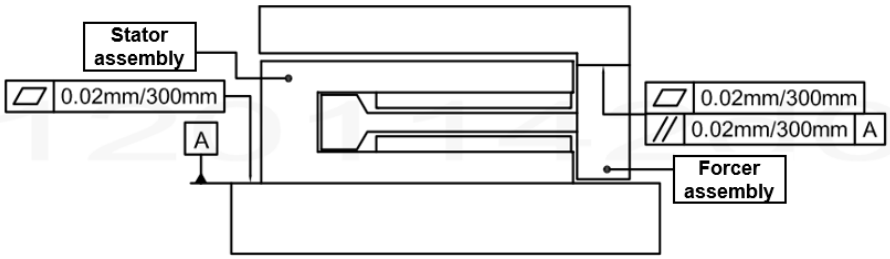

When an ironless linear motor is installed with the forcer and stator assembly, please pay special attention to the dimensions (H & G1 & G2 & G3) between the forcer and stator, and such dimensions can affect the performance and reliability of the linear motor. (For values H & G1 & G2 & G3, please refer to Table 4.6)

Fig. 4.10: Ironless linear motor installation dimension

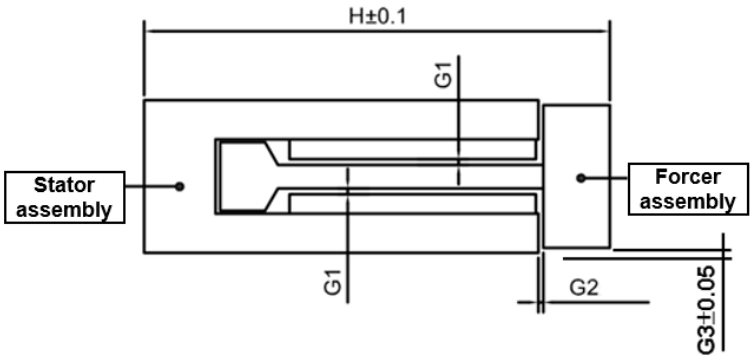

Table 4.6: Ironless linear motor installation dimension chart

Model	Dimension (mm)			
	H	G1	G2	G3
LMCA	74,5	≥ 0,4	1,0	1,0
LMCB	94,5	≥ 0,4	1,0	1,0
LMCC	117,5	≥ 0,4	1,0	3,0
LMCD	105,0	≥ 0,4	1,2	1,0
LMCE	125,0	≥ 0,4	1,2	1,0
LMCF	172,0	≥ 0,4	1,2	2,3
LMC-EFC	68,5	≥ 0,4	1,3	0,35
LMC-EFE	93,0	≥ 0,4	1,3	0,35
LMC-EFF	122,0	≥ 0,4	1,4	0,50
LMC-HUB	53,0	≥ 0,4	0,5	0,65

4.3 Shaft linear motor (LMT) mechanical installation interface

For the fixation base installation surface (datum plane A) secured underneath the stator assembly, the recommended plane precision is 0,02 mm/300 mm. For the installation surface fastening the forcer assembly, the recommended plane precision is 0,02 mm/300 mm, and it is parallel to the datum plane A, and the parallel precision is 0,02 mm/300 mm.

Fig. 4.11: Shaft linear motor installation interface geometric precision

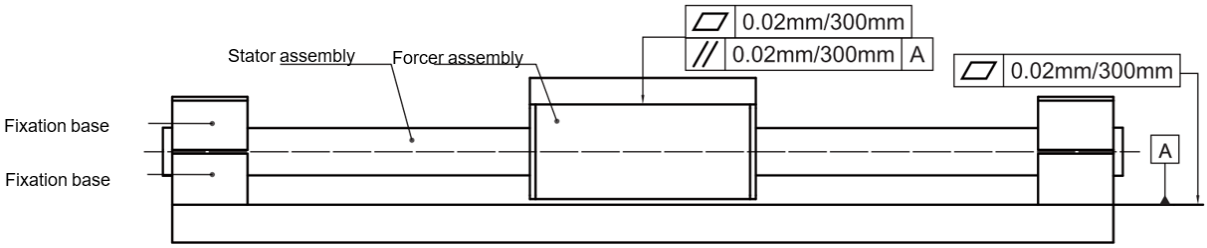

The recommended design of stator fixation base is to use a V-shape sleeper.

Fig. 4.12: Fixation base design

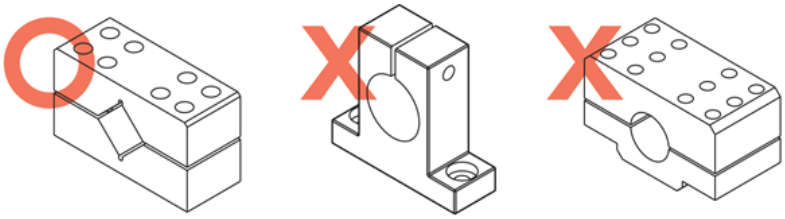

The fixation base length (L1) for securing the stator can be changed for different strokes.

Table 4.7: Securement length of fixation base

Model	LMT2D/LMT2T/LMT2Q		
Stroke S (mm)	50 – 350	400 – 800	850 – 1.050
L1 (mm)	25	40	60
Model	**LMT6D/LMT6T/LMT6Q**		
Stroke S (mm)	100 – 350	400 – 800	850 – 1.050
L1 (mm)	25	40	60
Model	**LMTA2/LMTA3/LMTA4**		
Stroke S (mm)	100 – 300	350 – 700	750 – 1.550
L1 (mm)	25	40	60
Model	**LMTB2/LMTB3/LMTB4**		
Stroke S (mm)	100 – 700	750 – 1.300	1350 – 1.550
L1 (mm)	50	70	100
Model	**LMTC2/LMTC3/LMTC4**		
Stroke S (mm)	100 – 750	800 – 1.500	1.550 – 2.000
L1 (mm)	50	70	100

Both H1 and H2 refer to the dimension of height from the datum plane A to the stator assembly center. It is recommended that after the installation of the stator assembly, the height difference shall not exceed 0.2mm; both W1 and W2 refer to the dimension of height from the datum plane B to the stator assembly center. It is recommended that after the installation of the stator assembly, the height difference shall not exceed 0,2 mm; $|H1-H2| \leq 0{,}2$ mm; $|W1-W2| \leq 0{,}2$ mm. (as shown in Fig. 4.13)

Fig. 4.13: Stator assembly installation dimension

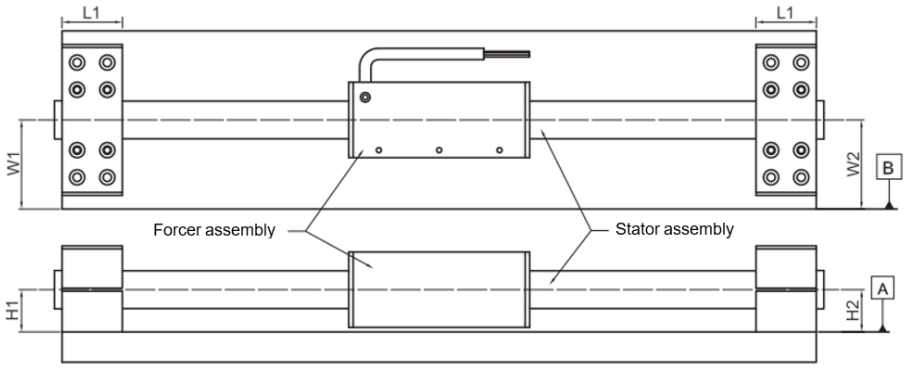

Datum C refers to the center of a stator assembly, and datum D refers to the reference axis of a forcer assembly. It is recommended that after the installation of the forcer and stator assemblies, the concentricity of datum C and datum D shall not be greater than 0,2 mm. (as shown in Fig. 4.14)

Fig. 4.14: Geometric tolerance of forcer and stator assembly installation height

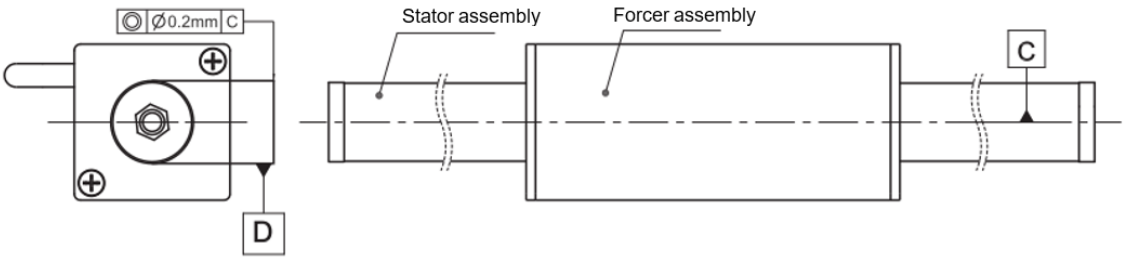

During the installation of the forcer and stator assembly, please pay special attention to the dimension (G) between the forcer and stator, and such dimensions can affect the performance and reliability of the linear motor (as shown in Fig. 4.15). (The values of G, ⦶D1 are as shown in Table 4.8).

Fig. 4.15: Forcer and stator installation dimensions precision

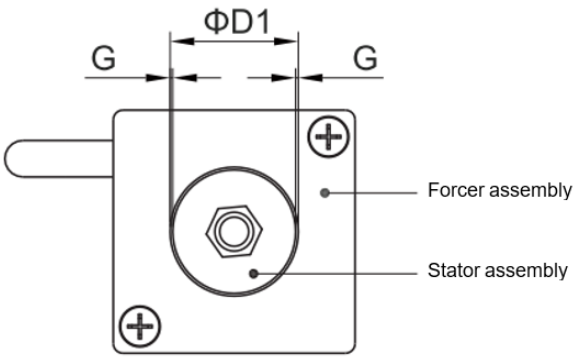

Table 4.8: Installation dimensions

Model	Dimensions (mm)	
	ø D1	G
LMT2	13	0,25 – 0,50
LMT6	16	0,25 – 0,50
LMTA	21,5	0,375 – 0,75
LMTB	26,5	0,375 – 0,75
LMTC	37	0,50 – 1,00

The guideway is magnetic element which could easily generate attraction force with the stator. In order to avoid the stator be deformed by the attraction force and problems in installation, please keep the installation distance(c) as shown in Fig. 4.16 and Table 4.9.

Fig. 4.16: Installation distance while installing guideway

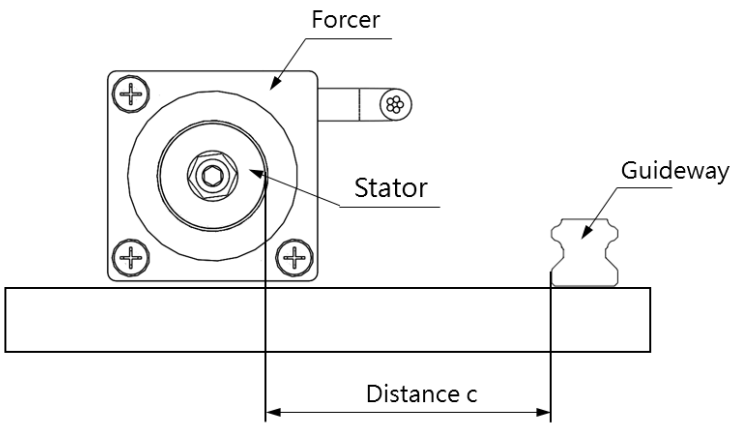

Table 4.9: Installation distance

Series	LMT2	LMT6	LMTA	LMTB	LMTC
c (mm)	≥ 30	≥ 30	≥ 40	≥ 50	≥ 80

The installation distance (d) as shown in Fig. 4.17 and Table 4.10 should be kept as well while installing the magnetic scale, or it will easily cause interference in positioning if the magnetic field is too strong.

Fig. 4.17: Installation distance while installing magnetic scale

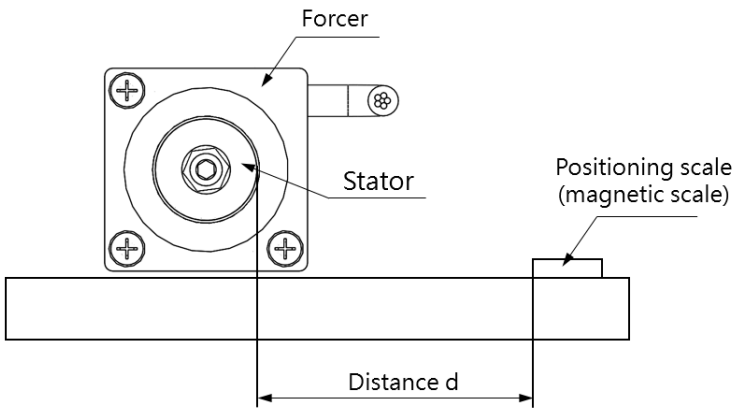

Table 4.10: Installation distance

Series	LMT2	LMT6	LMTA	LMTB	LMTC
d (mm)	≥ 40	≥ 50	≥ 60	≥ 70	≥ 100

4.4 Forcer parallel design

Linear motors can be co-axially grouped with multiple sets of forcers in parallel for use. While multiple sets of forcers are installed in parallel, it is necessary to confirm that the motor models are identical to each other. In addition, assembly shall be performed according to the outlet direction and the parallel span (△X) design in order to ensure that the linear motor phases are the same before activation. The parallel span and installation outlet relationship of each series motor will be explained in a later chapter in more detail. For the motor parallel parameter calculation, please refer to Table 4.10.

Table 4.11: Motor parallel parameter calculation

	Single unit	2 units in parallel	3 units in parallel	4 units in parallel
Resistance (Ω)	A	A/2	A/3	A/4
Inductance (mH)	B	B/2	B/3	B/4
Force constant (N/Arms)	C	C	C	C
Back EMF constant (Vrms/(m/s))	D	D	D	D
Continuous current (Arms)	E	E*2	E*3	E*4
Peak current (Arms)	F	F*2	F*3	F*4
Continuous force (N)	G	G*2	G*3	G*4
Peak force (N)	H	H*2	H*3	H*4

4.4.1 Linear motor moving direction

Definition of the positive direction of Linear motor as follow:
Input U/V/W in sequence, the initial moving direction is the positive direction.
And please refer to 9.2, moving direction of Linear motor.

4.4.2 LMSA linear motor series

Fig. 4.18: LMSA/LMSA-Z linear motor parallel connection illustration

Same cable outlet direction (Same side)

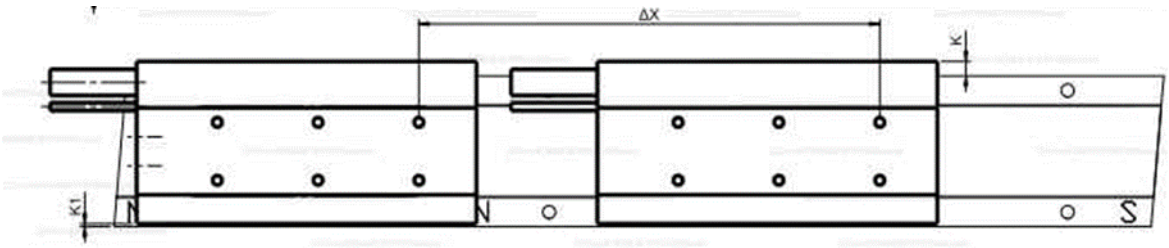

Opposing cable outlet direction (Outward)

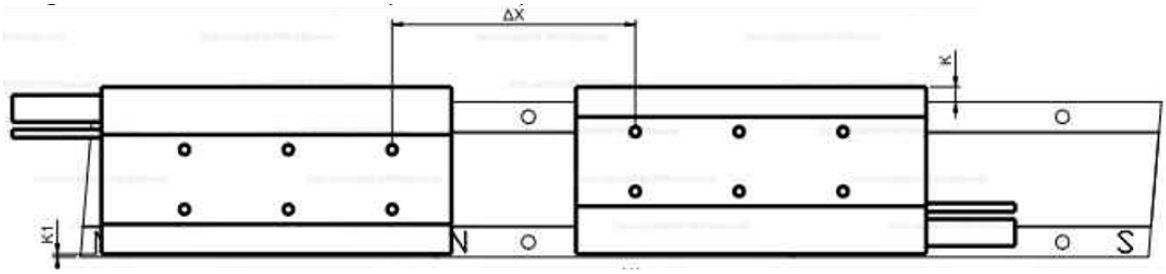

Opposing cable outlet direction (Inward)

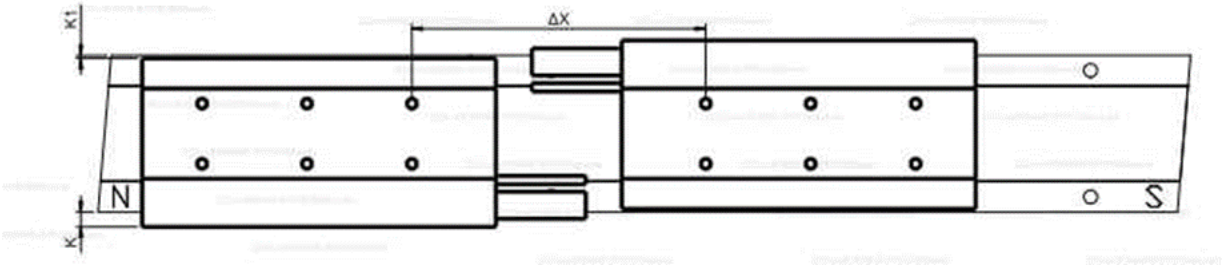

Table 4.12: LMSA/LMSA parallel wiring chart

LMSA/LMSA-Z	Same side			Outward			Inward		
Motor 1	U	V	W	U	V	W	U	V	W
Motor 2	U	V	W	W	V	U	W	V	U
△X (2P = 30 mm)	n × 2P (n is an integer)			65 + n × 2P (n = 0, 1, 2…etc)			65 + n × 2P (n = 0, 1, 2…etc)		

Table 4.13: LMSA-G parallel wiring chart

LMSA-G	Same side			Outward			Inward		
Motor 1	U	V	W	U	V	W	U	V	W
Motor 2	U	V	W	W	V	U	W	V	U
△X (2P = 30 mm)	n × 2P (n is an integer)			82 + n × 2P (n = 0, 1, 2…etc)			83 + n × 2P (n = 0, 1, 2…etc)		

4.4.3 LMFA/LMFP water-cooling linear motor series

Fig. 4.19: LMFA/LMFP linear motor parallel connection illustration

Same cable outlet direction (Same side)

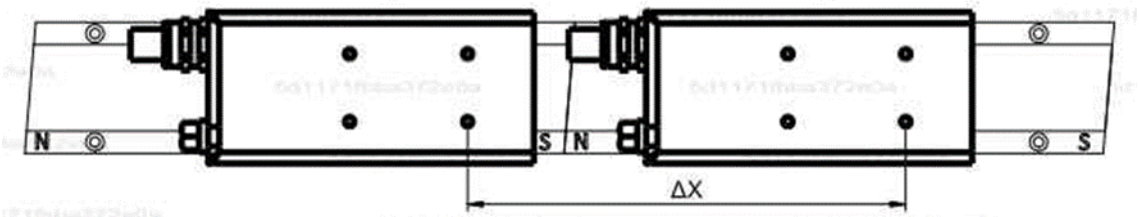

Opposing cable outlet direction (Outward)

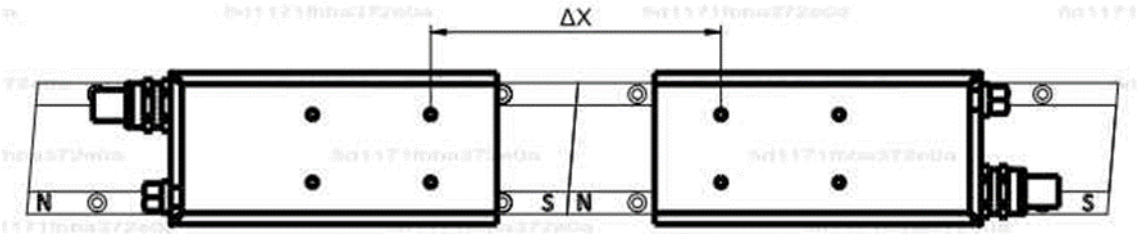

Opposing cable outlet direction (Inward)

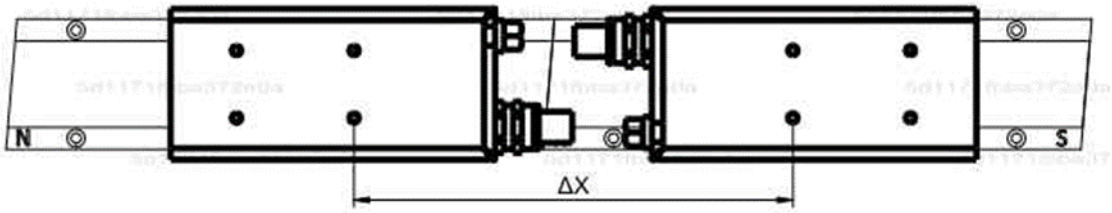

Tabelle 4.1: LMFA/LMFP parallel wiring chart

LMFA/LMFP	Same side			Outward			Inward			Model
Motor 1	U	V	W	U	V	W	U	V	W	
Motor 2	U	V	W	W	V	U	W	V	U	
△X (2P = 30 mm)	n × 2P (n is an integer)			82.5 + n × 2P (n = 0, 1, 2…etc)			322.5 + n × 2P (n = 0, 1 ,2…etc)			LMFA0–2 series LMFP24 series
△X (2P = 46 mm)	n × 2P (n is an integer)			127 + n × 2P (n = 0, 1, 2…etc)			402 + n × 2P (n = 0, 1, 2…etc)			LMFA3–6 series LMFP3–6 series

4.4.4 LMSC magnetic brake linear motor series

Fig. 4.20: LMSC linear motor parallel connection illustration

Same cable outlet direction (Same side)

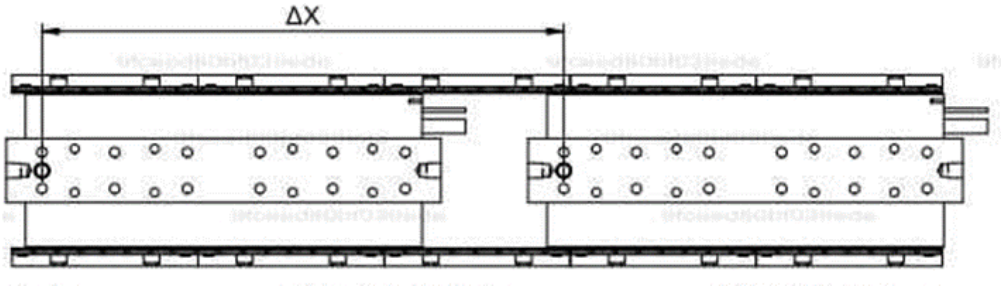

Opposing cable outlet direction (Outward)

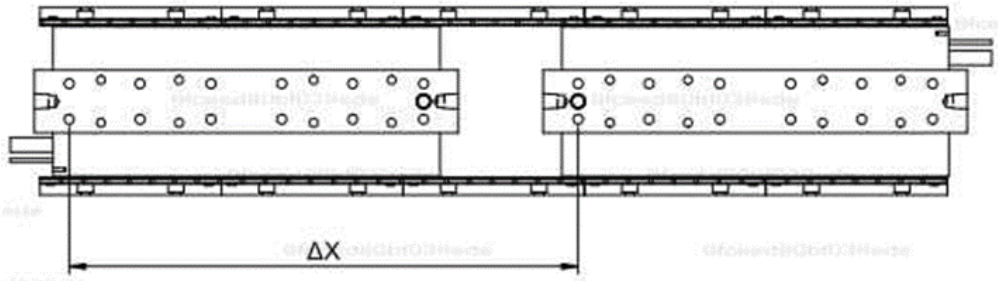

Opposing cable outlet direction (Inward)

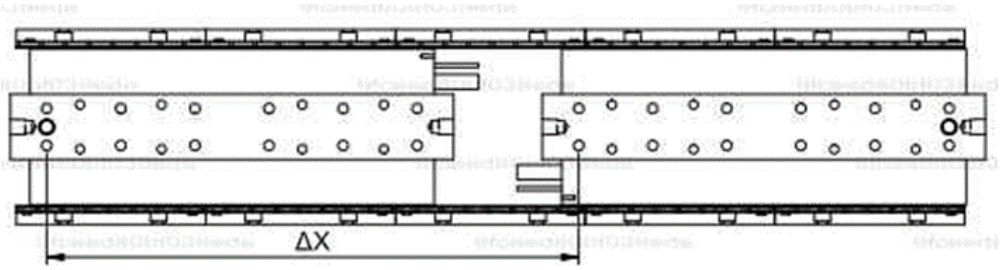

Table 4.14: LMSC parallel wiring chart

LMSC	Same side			Outward			Inward		
Motor 1	U	V	W	U	V	W	U	V	W
Motor 2	U	V	W	W	V	U	W	V	U
△X (2P = 32 mm)	320 + n × 2P (n = 1, 2, 3 … etc.)								

4.4.5 LMSS linear motor series

Fig. 4.21: LMSS linear motor parallel connection illustration

Same cable outlet direction (Same side)

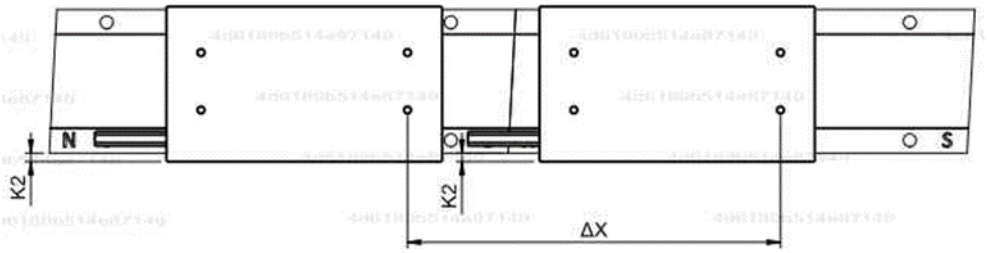

Opposing cable outlet direction (Outward)

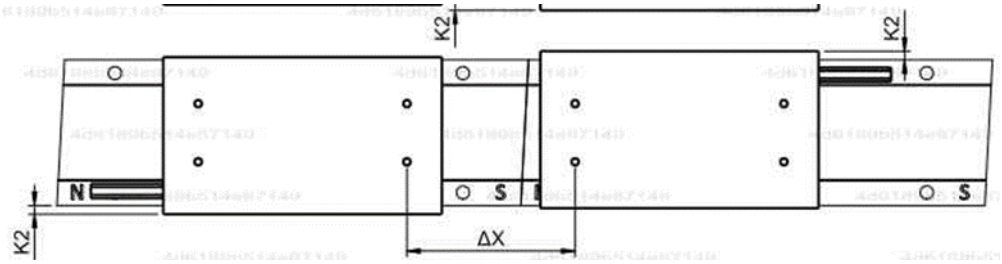

Opposing cable outlet direction (Inward)

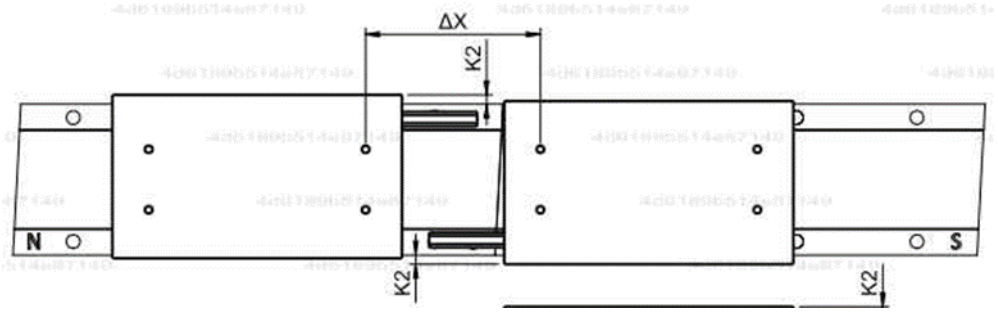

Table 4.15: LMSS parallel wiring chart

LMSS	Same side			Outward			Inward		
Motor 1	U	V	W	U	V	W	U	V	W
Motor 2	U	V	W	W	V	U	W	V	U
△X (2P = 20 mm)	n × 2P (n is an integer)			35 + n × 2P (n = 0, 1, 2…etc.)			81 + n × 2P (n = 0, 1, 2…etc.)		

4.4.6 LMC ironless linear motor series

LMC A/B/C/D/E/F series

Fig. 4.22: LMC A/B/C/D/E/F linear motor parallel connection illustration

Same cable outlet direction (Same side)

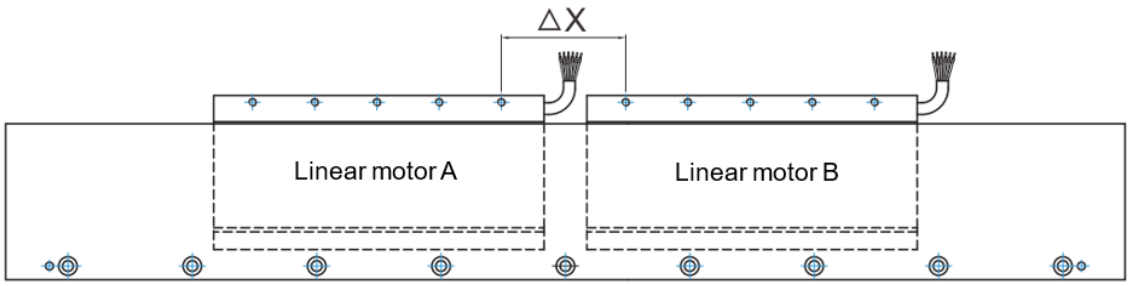

Opposing cable outlet direction (Outward)

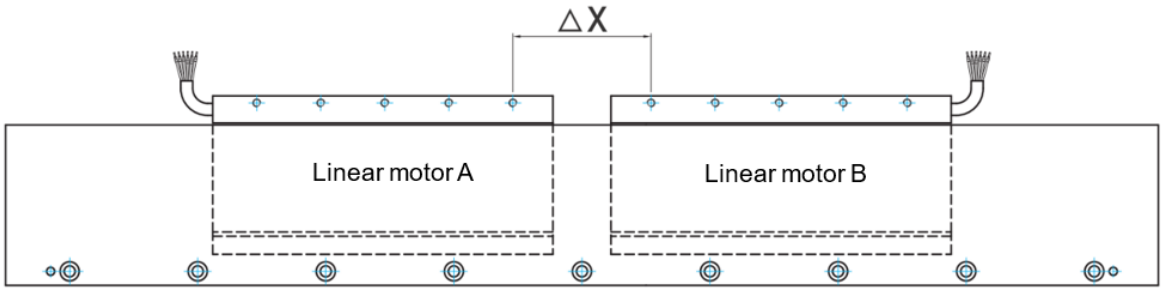

Opposing cable outlet direction (Inward)

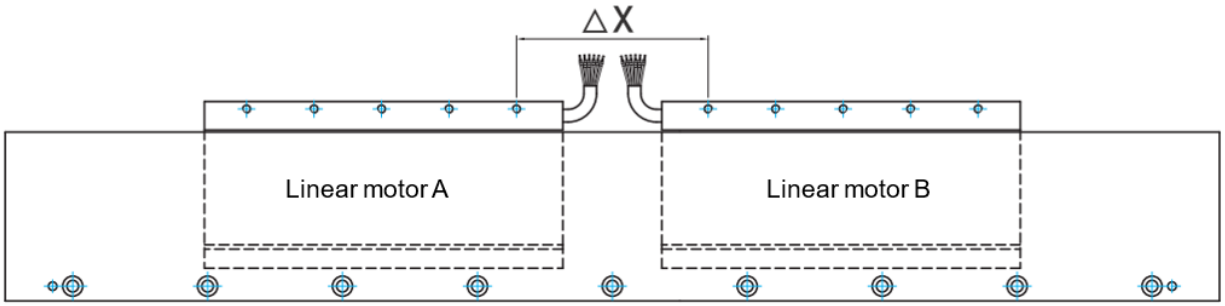

Table 4.16: LMCA/B/C parallel wiring chart

LMCA/B/C	Same side			Outward			Inward		
Linear motor A	U	V	W	U	V	W	U	V	W
Linear motor B	U	V	W	W	V	U	W	V	U
△X (2P = 32 mm)	32 + n × 2P (n = 1, 2…)			18 + n × 2P (n = 1, 2…)			46 + n × 2P (n = 1, 2…)		

Table 4.17: LMCD/E/F parallel wiring chart

LMCD/E/F	Same side			Outward			Inward		
Linear motor A	U	V	W	U	V	W	U	V	W
Linear motor B	U	V	W	U	W	V	V	U	W
△X (2P = 60 mm)	60 + n × 2P (n = 1, 2…)			50 + n × 2P (n = 0, 1, 2…)			50 + n × 2P (n = 0, 1, 2…)		

LMC-EF series

Fig. 4.23: LMC-EF linear motor parallel connection illustration

Same cable outlet direction (Same side)

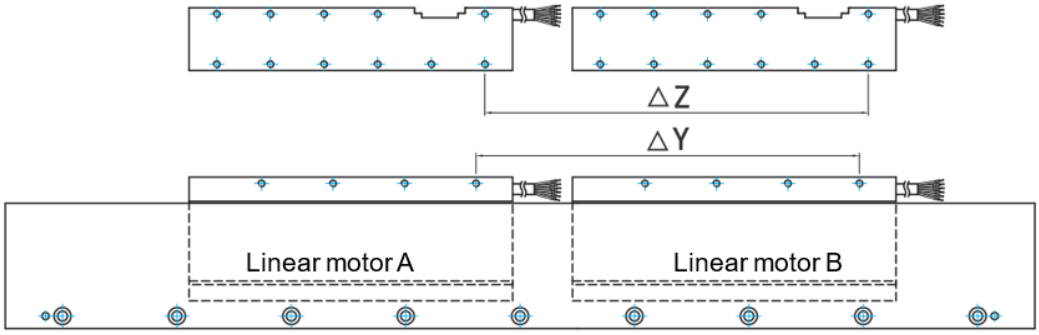

Opposing cable outlet direction (Outward)

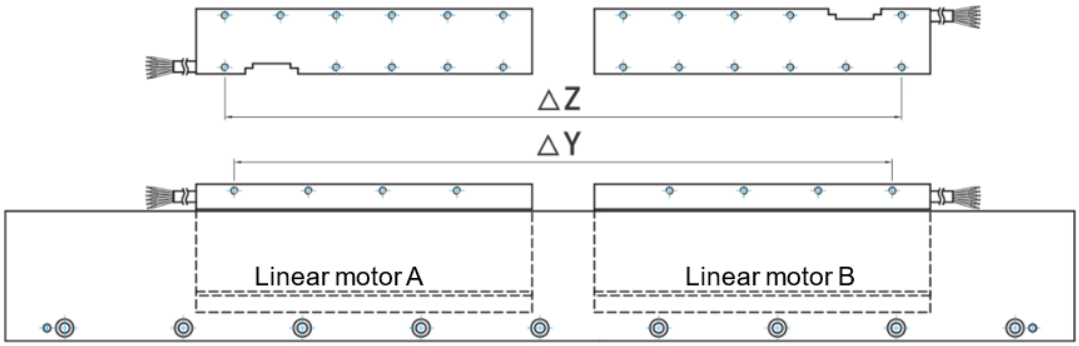

Opposing cable outlet direction (Inward)

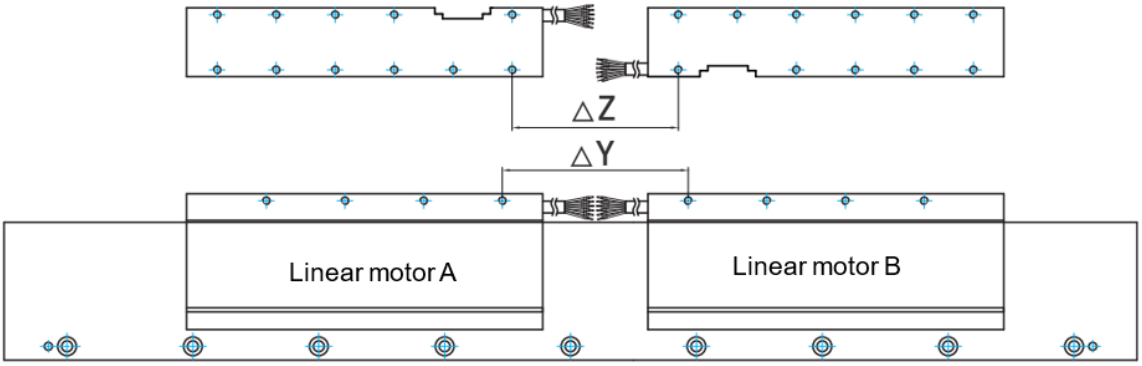

Table 4.18: LMC-EF parallel wiring chart

LMC-EFC	Same side			Outward			Inward		
Linear motor A	U	V	W	U	V	W	U	V	W
Linear motor B	U	V	W	U	W	V	V	U	W
ΔY (2P = 60 mm)	n × 2P			90 + n × 2P			10 + n × 2P		
ΔZ	n × 2P			100 + n × 2P			n × 2P		
ΔZ	LMC-EFC1 : n = 2, 3, 4... LMC-EFC2 : n = 3, 4, 5... LMC-EFC3 : n = 4, 5, 6... LMC-EFC4 : n = 5, 6, 7...			LMC-EFC1 : n = 0, 1, 2... LMC-EFC2 : n = 2, 3, 4... LMC-EFC3 : n = 4, 5, 6... LMC-EFC4 : n = 6, 7, 8...			n = 2, 3, 4…		
LMC-EFE	**Same side**			**Outward**			**Inward**		
Linear motor A	U	V	W	U	V	W	U	V	W
Linear motor B	U	V	W	U	W	V	V	U	W
ΔY (2P = 60 mm)	n × 2P			90 + n × 2P			10 + n × 2P		
ΔZ	n × 2P			99 + n × 2P			1 + n × 2P		
n	LMC-EFE1 : n = 2, 3, 4... LMC-EFE2 : n = 3, 4, 5... LMC-EFE3 : n = 4, 5, 6... LMC-EFE4 : n = 5, 6, 7... LMC-EFE5 : n = 6, 7, 8... LMC-EFE6 : n = 7, 8, 9...			LMC-EFE1 : n = 0, 1, 2... LMC-EFE2 : n = 2, 3, 4... LMC-EFE3 : n = 4, 5, 6... LMC-EFE4 : n = 6, 7, 8... LMC-EFE5 : n = 8, 9, 10... LMC-EFE6 : n = 10, 11, 12 ...			n = 2, 3, 4…		

4.4.7 LMT Shaft linear motor series

Fig. 4.24: LMT linear motor parallel connection illustration

Same cable outlet direction (Same side)

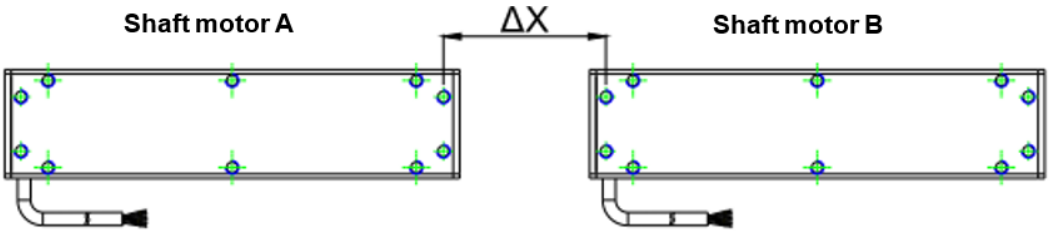

Opposing cable outlet direction (Outward)

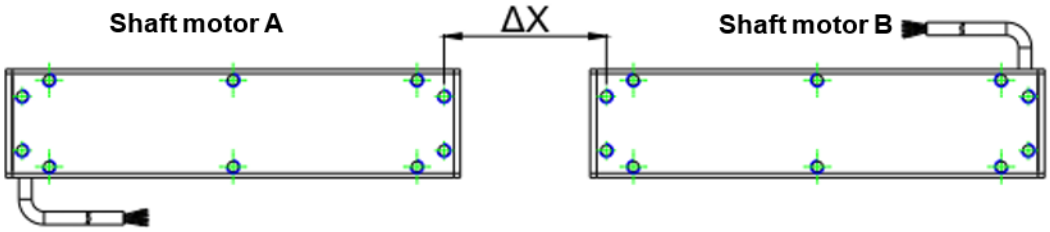

Opposing cable outlet direction (Inward)

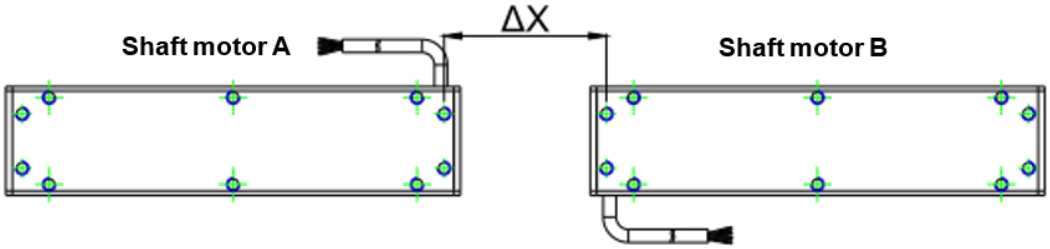

Table 4.19: LMT same cable outlet direction parallel wiring chart

LMT 2D/2Q	Same side			LMT 2T	Same side		
Linear motor A	U	V	W	Linear motor A	U	V	W
Linear motor B	U	V	W	Linear motor B	U	V	W
△X (2P = 48 mm)	n × 2P − 8,2 (n = 1, 2, 3…)			△X (P = 24mm)	(2n − 1) × P − 8,2 (n = 1, 2, 3…)		
LMT 6D/6Q	**Same side**			**LMT 6T**	**Same side**		
Linear motor A	U	V	W	Linear motor A	U	V	W
Linear motor B	U	V	W	Linear motor B	U	V	W
△X (2P = 60 mm)	n × 2P − 10,5 (n = 1, 2, 3…)			△X (P = 30mm)	(2n − 1) × P − 10,5 (n = 1, 2, 3…)		
LMT A2/A4	**Same side**			**LMT A3**	**Same side**		
Linear motor A	U	V	W	Linear motor A	U	V	W
Linear motor B	U	V	W	Linear motor B	U	V	W
△X (2P = 72 mm)	n × 2P − 12 (n = 1, 2, 3…)			△X (P = 36mm)	(2n − 1) × P − 12 (n = 1, 2, 3…)		
LMT B2/B4	**Same side**			**LMT B3**	**Same side**		
Linear motor A	U	V	W	Linear motor A	U	V	W
Linear motor B	U	V	W	Linear motor B	U	V	W
△X (2P = 90 mm)	n × 2P − 15 (n = 1, 2, 3…)			△X (P = 45 mm)	(2n − 1) × P − 15 (n = 1, 2, 3…)		
LMT C2/C4/C6	**Same side**			**LMT C3/C5**	**Same side**		
Linear motor A	U	V	W	Linear motor A	U	V	W
Linear motor B	U	V	W	Linear motor B	U	V	W
△X (2P = 120 mm)	n × 2P − 20 (n = 1, 2, 3…)			△X (P = 60 mm)	(2n − 1) × P − 20 (n = 1, 2, 3…)		

Table 4.20: LMT different cable outlet directions parallel wiring chart

LMT 2 series	Outward			Inward		
Linear motor A	U	V	W	V	U	W
Linear motor B	V	U	W	U	V	W
△X (2P = 48 mm)	n × 2P − 8,2 (n = 1, 2, 3…)					
LMT 6 series	**Outward**			**Inward**		
Linear motor A	U	V	W	V	U	W
Linear motor B	V	U	W	U	V	W
△X (2P = 60 mm)	n × 2P − 10,5 (n = 1, 2, 3…)					
LMT A series	**Outward**			**Inward**		
Linear motor A	U	V	W	V	U	W
Linear motor B	V	U	W	U	V	W
△X (2P = 72mm	n × 2P − 12 (n = 1, 2, 3…)					
LMT B series	**Outward**			**Inward**		
Linear motor A	U	V	W	V	U	W
Linear motor B	V	U	W	U	V	W
△X (2P = 90 mm)	n × 2P − 15 (n = 1, 2, 3…)					
LMT C series	**Outward**			**Inward**		
Linear motor A	U	V	W	V	U	W
Linear motor B	V	U	W	U	V	W
△X (2P = 120 mm)	n × 2P − 20 (n = 1, 2, 3…)					

4.5 LMFA/LMFP Water-cooling motor cooling tube design

When a multiple number of linear motors are used, the cooling tubes of the motor must be installed in the parallel method, as shown in Fig. 4.25 (the inlet at the left side of the motor is connected to the inlet at the right side of the motor, and the outlets are also connected in the same way). When precision water-cooling is used, the channel is as shown in Fig. 4.26. For multiple precision water-cooling channels, please refer to Fig. 4.27.

Recommendation: Separate the channels of the forcer precision water-cooling and the stator precision water-cooling for operation can achieve greater effect.

Fig. 4.25: Motor cooling tube installation illustration

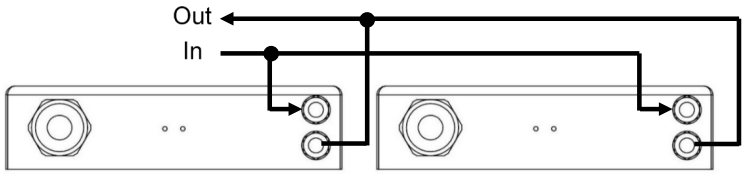

Fig. 4.26: Precision water-cooling channel illustration

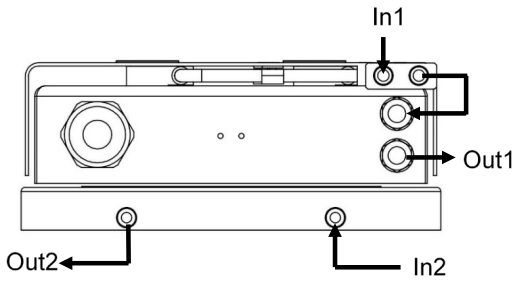

Fig. 4.27: Multiple precision water-cooling channels illustration

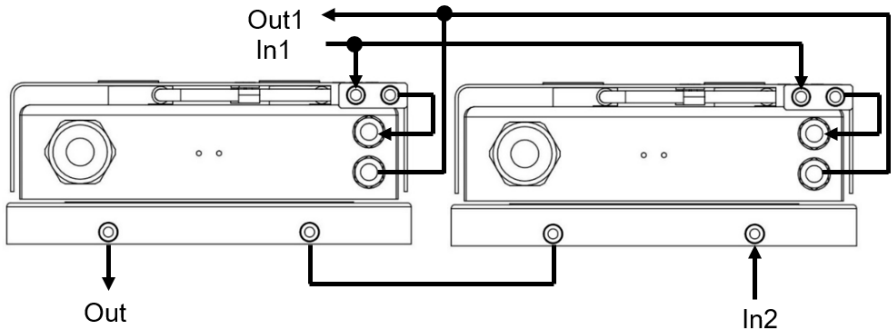

4.6 LMFA/LMFP water-cooling motor with LMFC precision water-cooling channel design

During the use of the water-cooling linear motor LMFA/LMFP along with the precision water-cooling series LMFC, the motor characteristic indicated on the HIWIN water-cooling motor drawings and specification refers to the water-cooling condition, and the coolant temperature is 20 °C. The water-cooling motor can also use oil cooling, and at this time, the motor performance may be adjusted appropriately according to the characteristic of the coolant.

The cooling condition indicated in the motor specification refers to the continuous running condition when the motor stator is under the criteria of Continuous force, thereby ensuring the coil temperature is controlled under the minimum criteria of below 120 °C. The performance of LMFC precision water-cooling is defined to be that the precision water-cooling surface temperature shall not be higher than the cooling machine outlet temperature setting by more than 4 °C. LMFC stator precision water-cooling includes the following two types, and the LMFC3–6 series adopts the standard type water channel design, as shown in Fig. 4.28; LMFC3–4 series adopts the return flow type water channel design, as shown in Fig. 4.29.

Fig. 4.28: Standard type water channel illustration

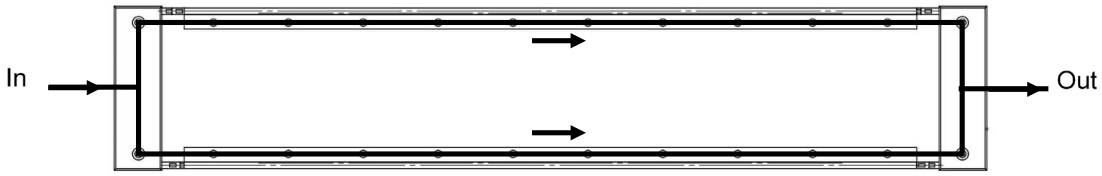

Fig. 4.29: Return flow type water-cooling channel illustration

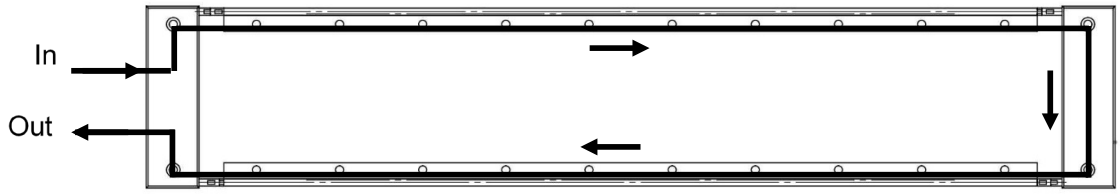

Fig. 4.30: Standard type installation interface

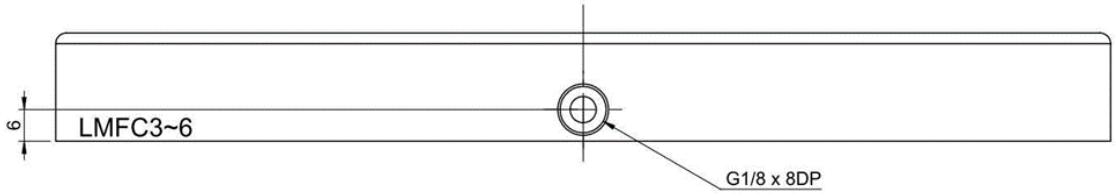

Fig. 4.31: Return flow type installation interface

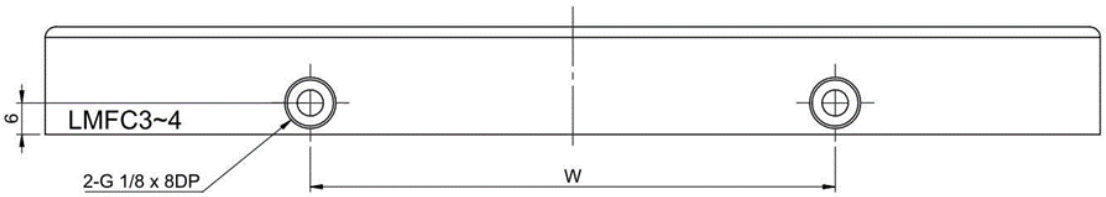

Table 4.21: Return flow type Installation dimension chart

Model	Dimensions (mm)
	W
LMFC3□	50
LMFC4□	100

LMFC Precision water-cooling linear motor assembly illustration is as shown in the drawing below

Fig. 4.32: LMFA precision water-cooling linear motor assembly illustration

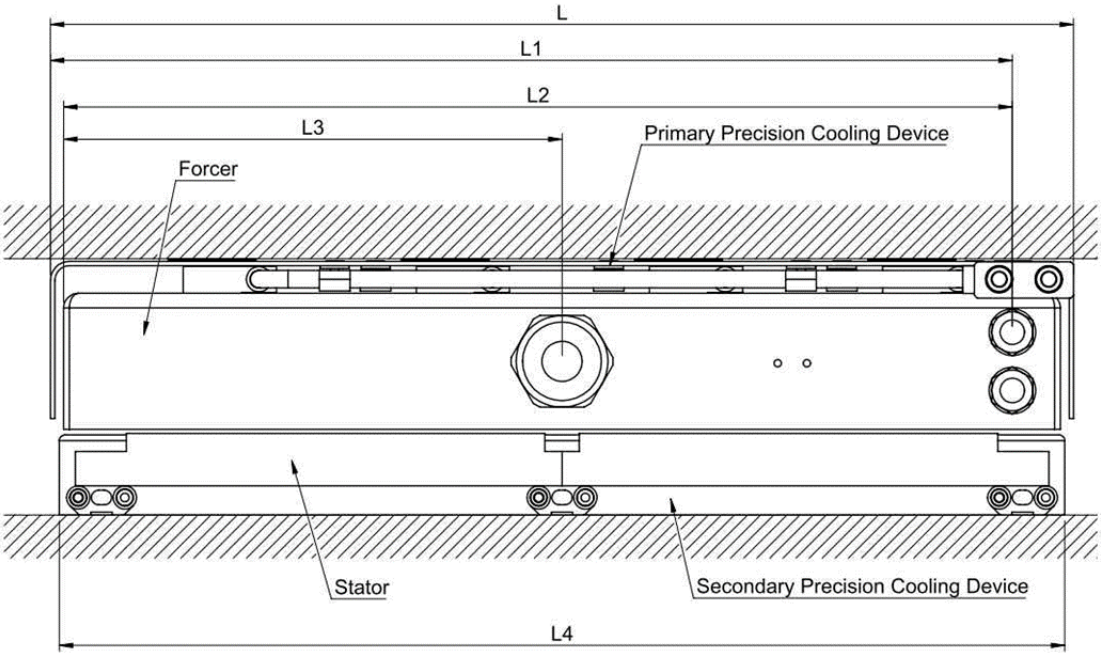

Table 4.22: LMFA precision water-cooling installation dimension

Model	Dimensions (mm)				
	L	L1	L2	L3	L4
LMFC0□	–				
LMFC1□					
LMFC2□					
LMFC3□	150	131	126,5	30	155
LMFC4□	197	178	173,5	30	201
LMFC5□	257	236	231,5	124	251
LMFC6□	351	330	325,5	171	345

Fig. 4.33: LMFP precision water-cooling linear motor assembly illustration

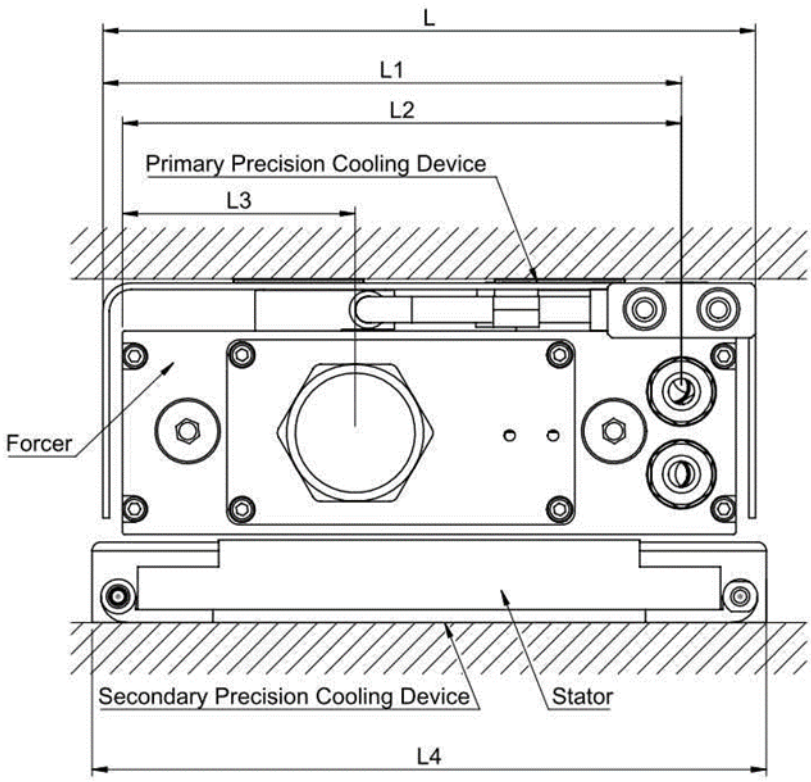

Table 4.23: LMFP precision water-cooling installation dimension

Model	Dimensions (mm)				
	L	L1	L2	L3	L4
LMFC0□	–				
LMFC1□					
LMFC2□					
LMFC3□	150	133	128,5	53,5	155
LMFC4□	197	180	175,5	53,5	201
LMFC5□	257	240	235,5	53,5	251
LMFC6□	351	334	329,5	53,5	345

4.7 Material used in water-cooling channel

Table 4.24: Water-cooling channel material chart

Item	Material
LMFA water-cooling linear motor	Cu (SF-Cu), SUS303 (1.4305), Viton
LMFC forcer precision water-cooling	A6061 (AlMgSi0.5), SUS304 (1.4301), Viton
LMFC stator precision water-cooling	A6061 (AlMgSi0.5), SUS303 (1.4305), Viton

4.8 Coolant of water-cooling linear motor

Attention! Risk related to working temperature.

Beware the operating environment of the cooling system to avoid damage.

- Please do not use the cooling system in frosty or icy environment
- Please do not use untreated water, or it might cause serious damage or break down

Customer could decide which cooling system and coolant to use with below requirements.

- It is recommended to use anti-corrosion water as the coolant.
- The cooling medium must be cleaned or filtered in advance to prevent blockage of the cooling circuit.
- The maximum allowable size of particles in the cooling medium is 100 µm.
- Coolant must be compatible with O-ring material to avoid pollution.
- Recommended additive including.
  - Ethylene glycol (thermosensitivity)
  - Ethylene glycol with 20%-30% softened water
  - Water with 3% Panolin
  - Water with 10% – 20% Tyfocor
  - Water with 30% Glysantin
  - Oil with 7 cst viscosity

Water which is used as basis for the coolant must comply as a minimum with the following requirements.

- Chloride concentration: c < 100 mg/l
- Sulfate concentration: c < 100 mg/l
- 6,5 ≤ pH value ≤ 9,5

Contact the anti-corrosion agent manufacturer relating to additional requirements!

5 Motor assembly

5.1 Iron core linear motor installation

Stator unit warning label

⚠ Caution! Strong magnetic field!

Keep away from anyone with a heart pacemaker or metal implants!

Be careful with the risk of hand injury when dealing with it.

Do not handle it with ferrous tools.

Credit cards, ATM cards, magnetic data carriers, wristwatches, etc. may be damaged when brought too near.

5.1.1 Precautions for handling stator

⚠ Warning! Risk of Stator access.

To avoid damage to products and harm to workers, take the stator in the correct way.

- The magnet warning label shall be attached at visible areas in order to prevent personnel injury.
- Please handle the stator with proper method in order to prevent personnel injury or stator damage.
- Please correctly take the stator to prevent personnel from injury or the stator from being damaged. (refer to Fig. 5.1).
- No matter what method is used, do not directly take the stator by handling the edge of the cover (refer to Fig. 5.2). Otherwise, personnel may get injured and the stator may be damaged.

⚠ Warning! Risk of crushing from strong attraction forces.

The permanent magnets of the stators cause strong attraction and repulsion forces when the stator segments are connected in series.

- Do not remove stators from their packaging until directly before their installation.
- Never unpack several stators at the same time.
- Never place stators next to each other unsecured.
- Immediately mount unpacked stators.

⚠ Warning! Risk of injury and material damage.

Incorrect alignment of the stator segments can lead to malfunction and/or uncontrolled movement of the motor.

- Arrange the stator segments in the correct order. (refer to Fig. 5.3)

⚠ Warning! Risk of death as a result of permanent magnet field.

Even when the motor is switched off, the permanent can put people with active medical implants at risk, who come close to the motors.

- Please be at least 50 mm away from the permanent magnets.
- People with heart rhythm devices or metal implants, maintain a minimum distance of 500 mm from the permanent magnets (trigger threshold for static magnetic fields of 0,5 mT as per directive 2013/35/EU).

⚠ Warning! Risk of damage as a result of permanent magnet field.

When working within a distance of 100 mm of components with permanent magnets, the magnetic field produces a strong magnetic attraction to magnetizable material.

- Do not underestimate the strength of magnetic attraction.
- In the induction zone, please do not carry the magnetizable material.
- Please use the tools that non-magnetized material.
- Please avoid the movement of the permanent magnet assembly relative to the conductive material, and the conductive material relative to the permanent magnet assembly.
- Only open the package of the motor assembly when it needs to be installed.
- When open the package, install components containing permanent magnets immediately.
- The installed Linear motor that needs to prevent accidental operation

○ Correct

Fig. 5.1: Correct method of handling the stator

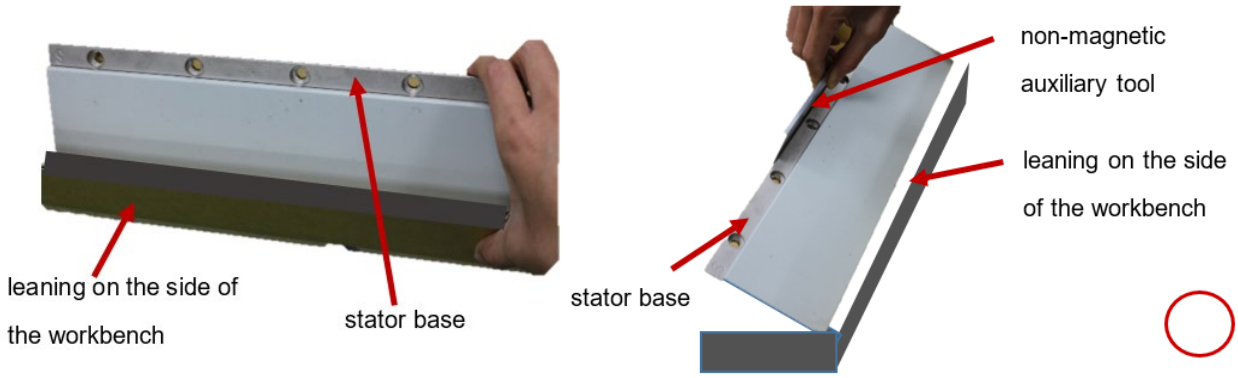

Lean the stator on one side of the workbench.
Hold the stator by handling its base.

Lean the stator on one side with the non-magnetic auxiliary tool.
Hold the stator by handling its base.

○ Incorrect

Fig. 5.2: Incorrect method of handling the stator

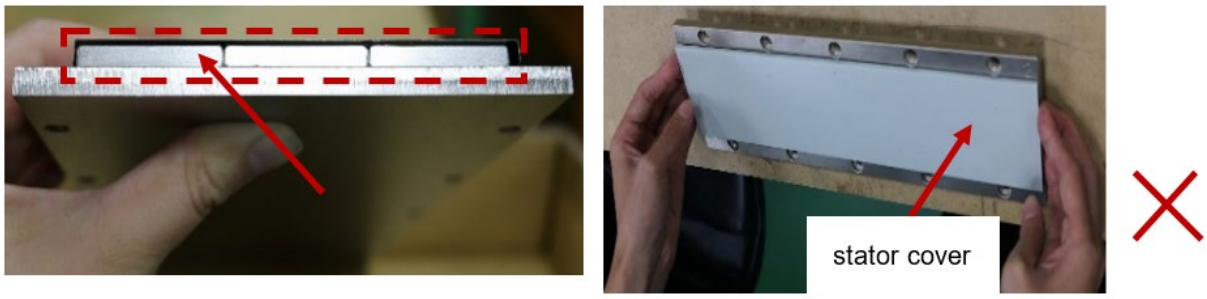

Do not hold the stator by handling the edge of the cover.

To prevent personnel from injury or the stator from being damaged, taking the stator by contacting the edge of the cover is strictly prohibited.

Fig. 5.3: Correct and incorrect assembly of stator

- Correct assembly of stator

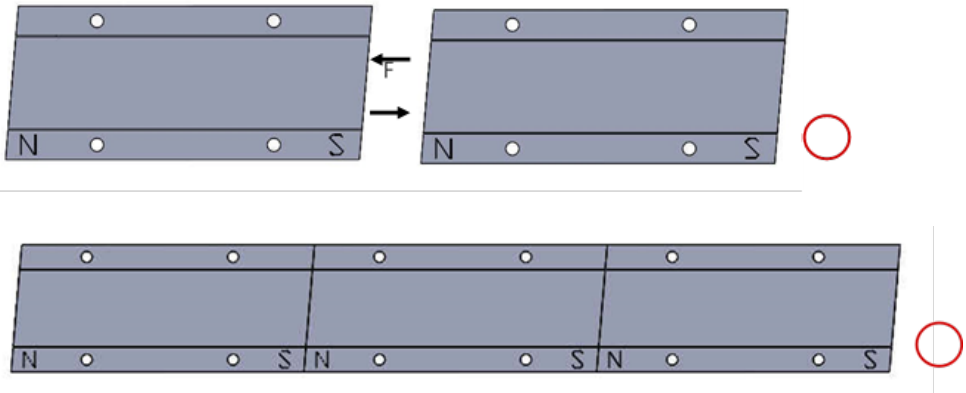

- Incorrect assembly of stator

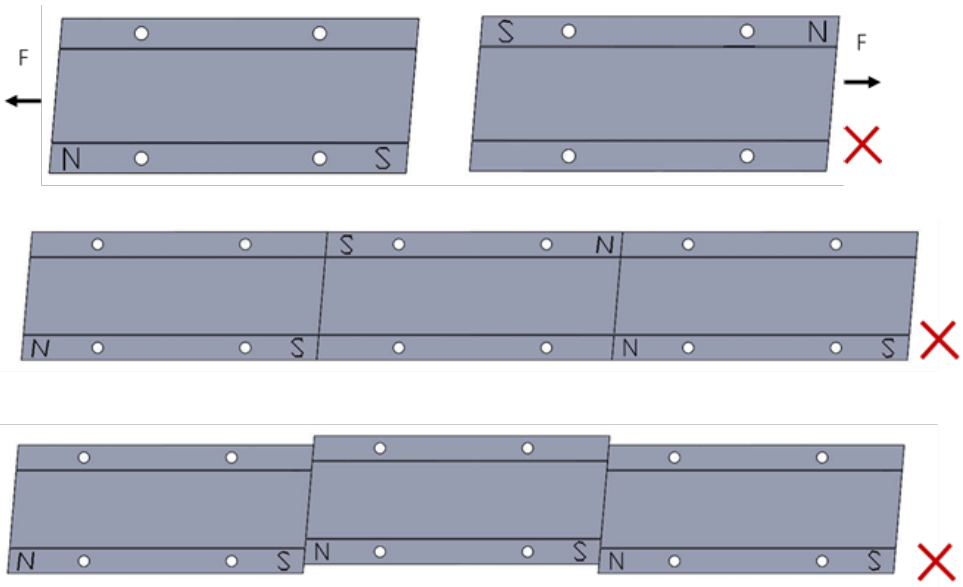

5.1.2 Precautions for installation of forcer and stator

⚠ Danger! Danger from strong magnet!

There is strong magnetic attraction between forcer and stator. To avoid harm to workers, conform to the regulations.

- There is a powerful attraction force (several hundred kilogram of force) between the forcer and stator of LMSA/LMFA. Installation personnel are requested to follow the Manual to perform the installation in order to prevent clamping injury by the forcer and stator.

⚠ Warning! Risk related to Linear motor assembly.

To avoid harm to workers, install the forcer and stator according to the regulations.

- When a multiple set of forcers are installed in parallel, please be aware of the span specification and motor phase in order to ensure the effective thrust force.
- During the installation of the forcer, please be aware of the air gap between the forcer and the stator. If it is not installed properly, it may increase the cogging force or reduce the motor thrust force.
- Before installation of the forcer, it is normal as a gap exists when the forcer is placed on the platform, as shown in Fig. 5.7. To install the forcer assembly, fasten the screws from the center portion toward the two left and right ends sequentially, as shown in Fig. 5.8. After the fastening is complete, there is no air gap between the forcer and the forcer base, as shown in Fig. 5.9.
- Please be aware of the strong magnetic attraction force between the two stators. It is prohibited to place hands between the two stators (as shown in Fig. 5.12) in order to prevent personnel injury (magnetic objects and watches etc. shall also be kept away).
- During the installation of a multiple sets of stators, the stator length may have accumulated tolerance such that hole position deviation may occur. Such occurrences are normal. Consequently, during the installation, a spacer of 0,1 – 0,2 mm can be placed between two stators to assist the adjustment of the screw positioning (as shown in Fig. 5.13), and once the positioning is complete, then perform fastening. After fastening is complete, then remove the spacer.

Attention!

- For the screw torque strength for fastening the forcer and stator assembly, please refer to Section 9.1.2.
- The maximum fastening depth of screws selected for the stator depends on the threaded holes of the customer's platform. For the minimum fastening depth, please refer to Section 9.1.2.
- For the maximum fastening depth and the minimum fastening depth of screws selected for the forcer, please refer to Section 9.1.2.

To transport a large forcer (such as LMFA), it is necessary to use a lifting tool and ensure that it is completely opposite from each other at both ends in order to perform the transportation. If the forcer weight is >20 kg, please use more than three ropes for lifting in order to prevent any danger.

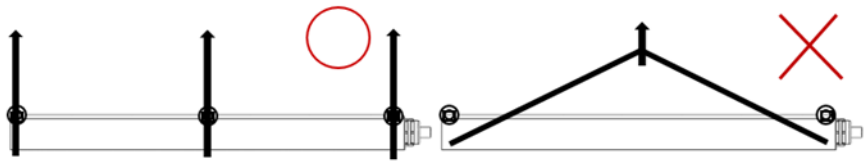

Step to assemble:

- First stator installation

  First, install one set of the stator. During installation, please be aware of the level of parallelism of the sliding track and the stator, followed by using screws to ① install ② the stator on the platform ③. (refer to Fig. 5.4)

- Forcer base and forcer installation.

  Use screws ④ to install the ⑤ forcer base onto the sliding block ⑥.(refer to Fig. 5.5)

  Use screws to install ⑧the forcer ⑦ onto the forcer base. The installation method shall be performed by fastening the screws from the center portion toward the two left and right ends sequentially. (refer to Fig. 5.6)

- Stator installation.

  Move the forcer base ⑨ on top of the platform to facilitate the installation of other stator. (refer to Fig. 5.10)

  Use screws to install ⑪ the stator ⑩ onto the platform, and slide to move the forcer base to ensure that there is no interference. (refer to Fig. 5.11)

Fig. 5.4: First stator installation

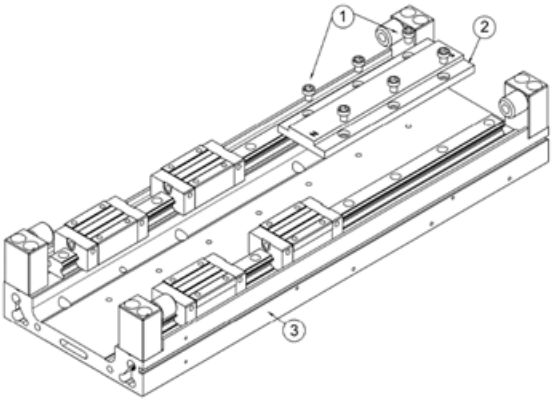

Fig. 5.5: Forcer base installation

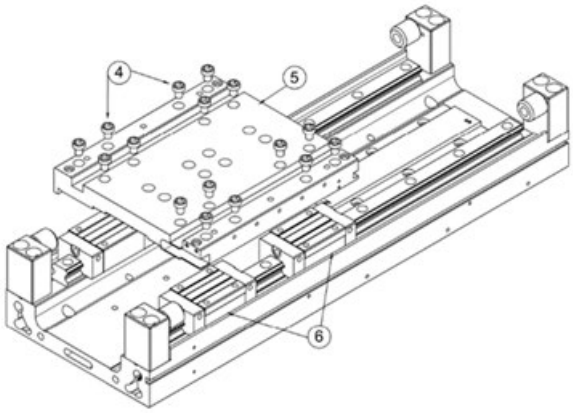

Fig. 5.6: Forcer installation

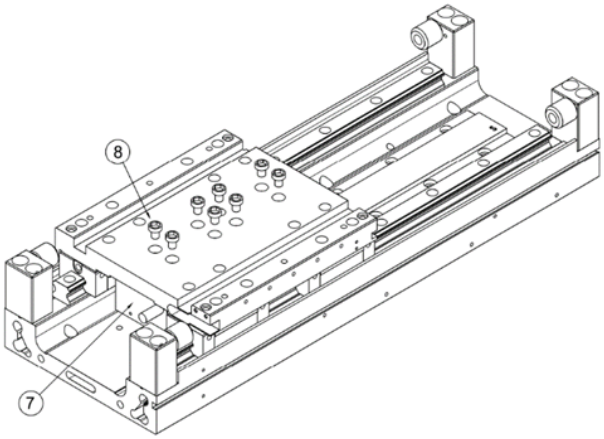

Fig. 5.7: Installation gap confirmation

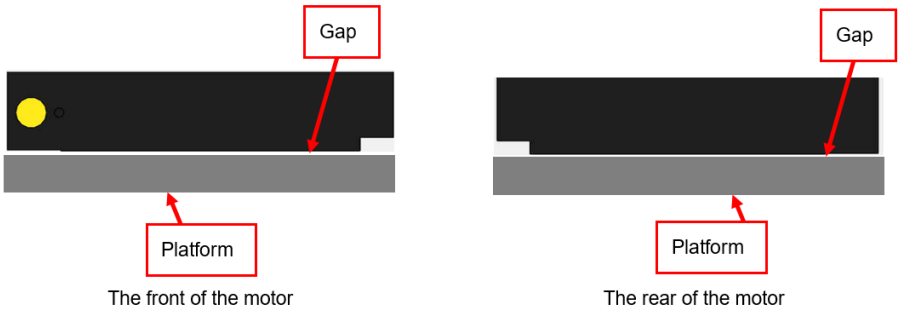

Fig. 5.8: Forcer installation sequence illustration

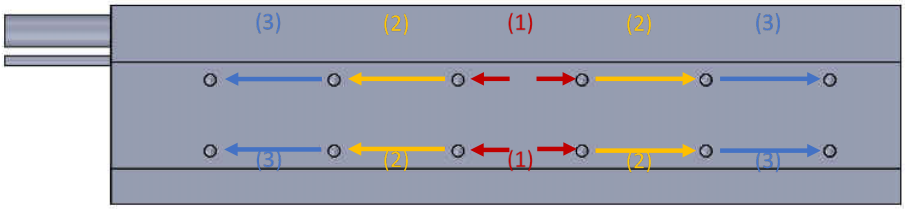

Fig. 5.9: Forcer gap illustration

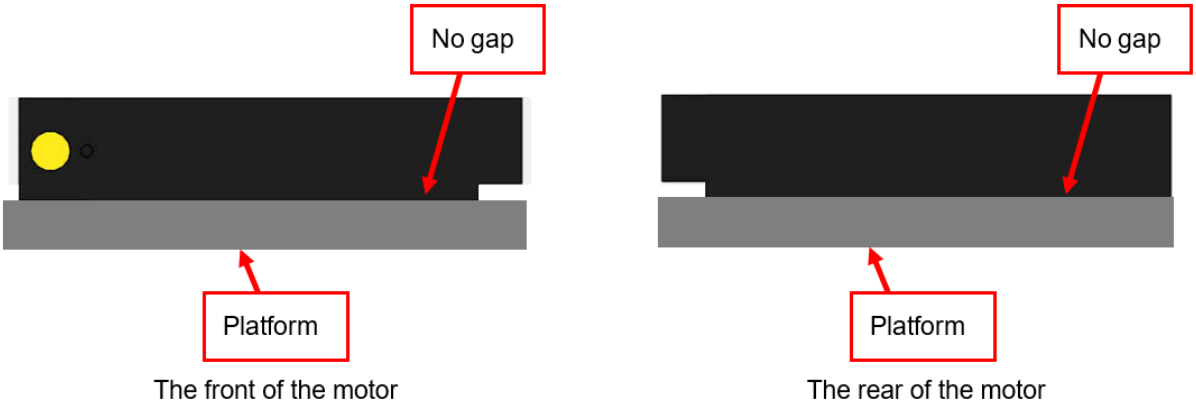

Fig. 5.10: Forcer base movement

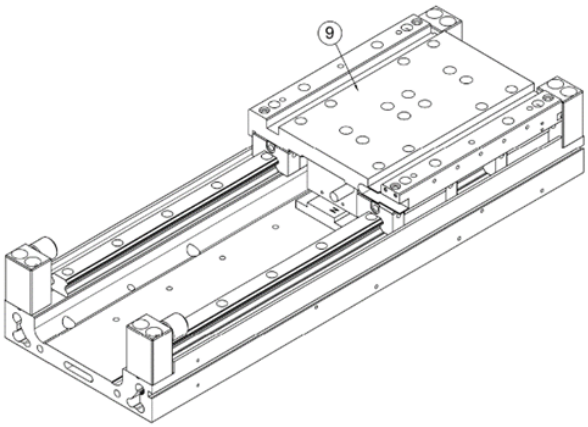

Fig. 5.11: Stator installation

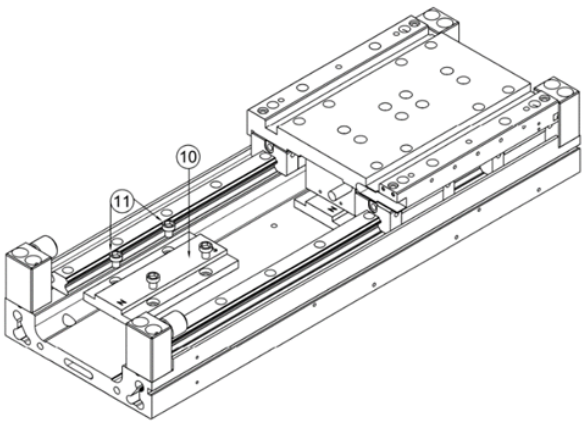

Fig. 5.12: Please be aware of the strong magnetic attraction force between the stators in order to prevent clamping injury of personnel hands.

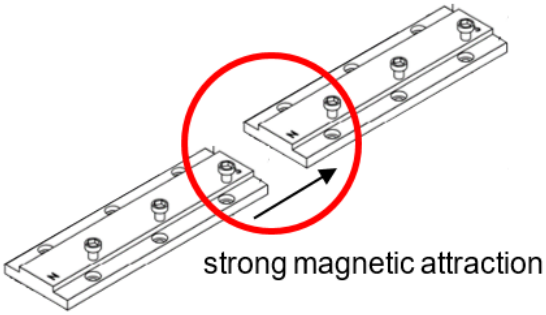

There is a strong magnetic attraction between stators, personnel must pay attention it to avoid one's hand from having a pinch injury

Fig. 5.13: Recommended use of spacer to assist the positioning during fastening of a multiple set of stators.

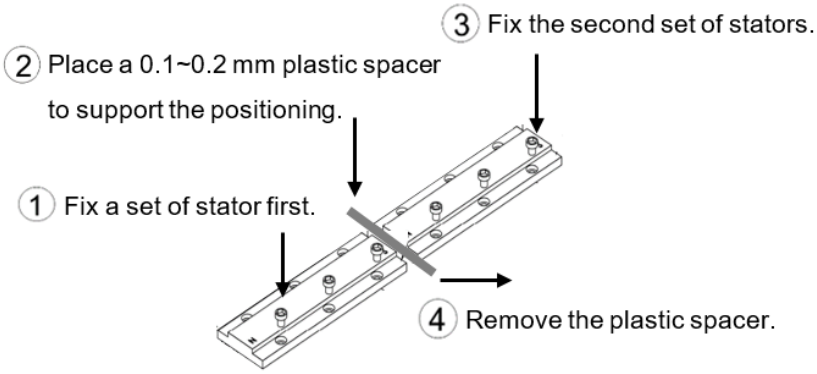

Use a plastic stator to support the positioning while assembling multiple stators.

Note:

Please prepare plastic spacer by customer.

5.1.3 Precautions for installation of LMSC forcer and stator

⚠ Warning! Risk of damage to the motor assembly.

Beware the structural strength of the designed equipment because there is strong magnetic attraction between forcer and stator. Insufficient structural strength will lead to structure deformation. Too much installation tolerance will affect the adjusting performance of the equipment.

- There is a strong magnetic attraction force between the forcer and stator, and one side of the attraction force is at least 2850 N.
- The installation structural strength at the two sides of the stators shall be considered in order to prevent any structural deformation due to the strong attraction force.
- When the gap between the forcer and stator is above 4,5 mm, the attracting force is close to 0.
- The polarity labels at the two sides of the stator shall be opposite from each other.
- Any uneven air gap in the LMSC magnetic brake linear motor can affect the attraction force between the forcer and stator. (refer to Fig. 5.26)

Step to assemble (stator):

- Clean all installation surfaces first.
- Apply screw fixation gel onto all screws for fastening the stator. (refer to Fig. 5.24)
- Use non-magnetic material for spacing on top of the stator.
- Place the stator in position.
- Use a non-magnetic tool (refer to Fig. 5.15) to install one side of the stators for half of the stroke.
- Place the non-magnetic object between the installation surfaces of the stators at two sides. (refer to Fig. 5.16)
- Use the non-magnetic tool to install the other side of the stators for half of the stroke. (refer to Fig. 5.17)

Fig. 5.14: Apply screw fixation gel

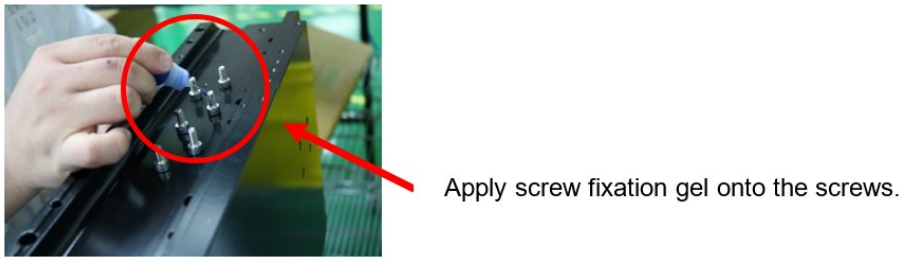

Fig. 5.15: Use non-magnetic tool to install the stator

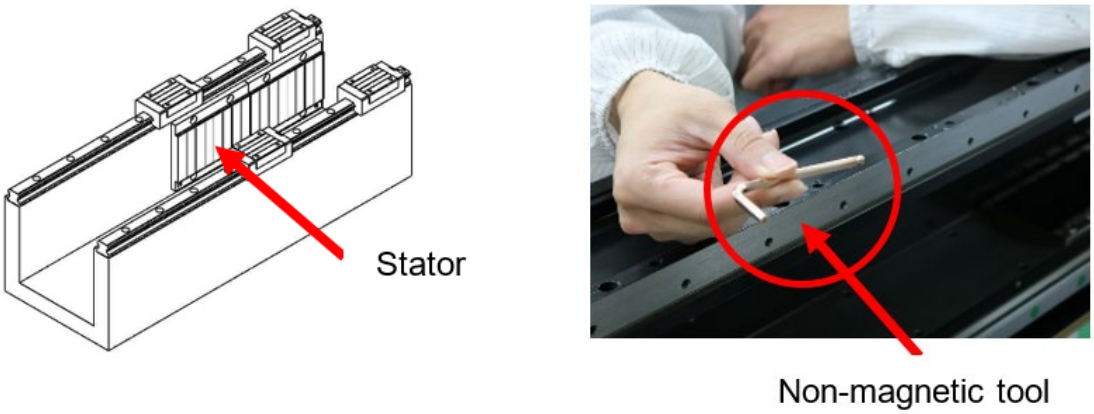

Fig. 5.16: Place the non-magnetic object

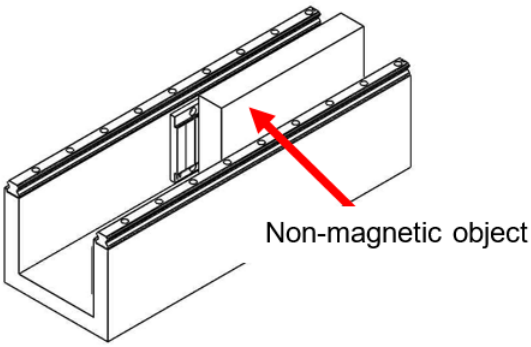

Fig. 5.17: Use non-magnetic tool to install the stator

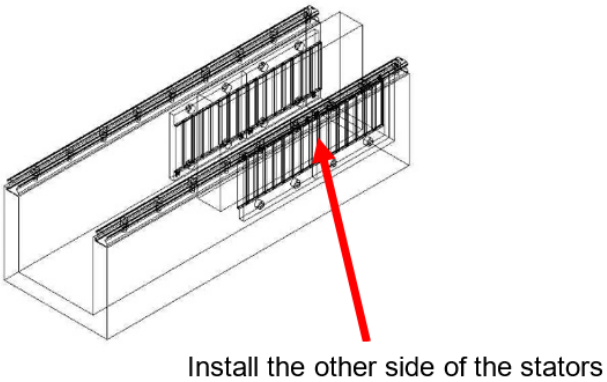

Step to assemble (forcer):

- Install the forcer onto the forcer base first. (refer to Fig. 5.18)
- Install the force base onto the base sliding block. (refer to Fig. 5.19)
- Use thickness gauge to adjust the air gap (refer to Fig. 5.20) to $0{,}75^{+0.25}_{-0.15}$.

Fig. 5.18: Forcer installation

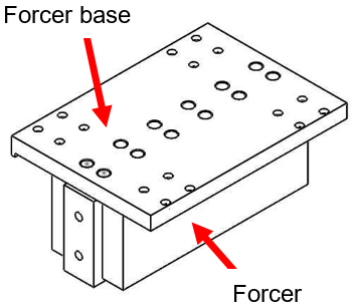

Fig. 5.19: Forcer base installation

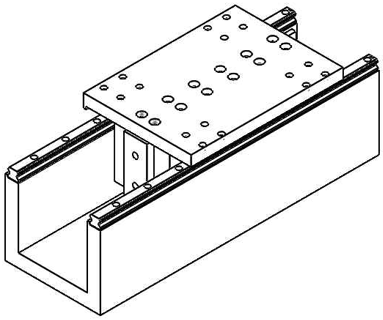

Fig. 5.20: Air gap illustration

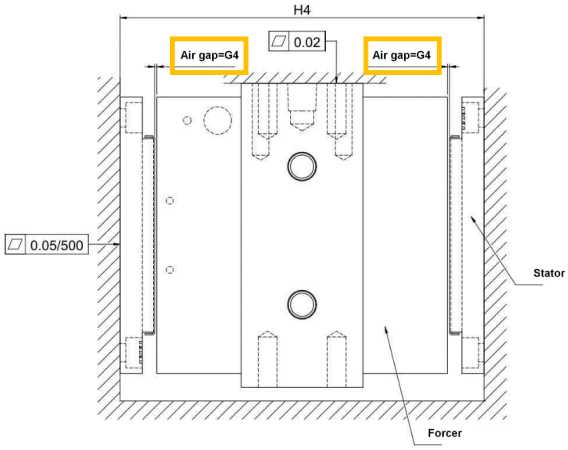

Fig. 5.21: LMSC air gap-attracting force relationship graph

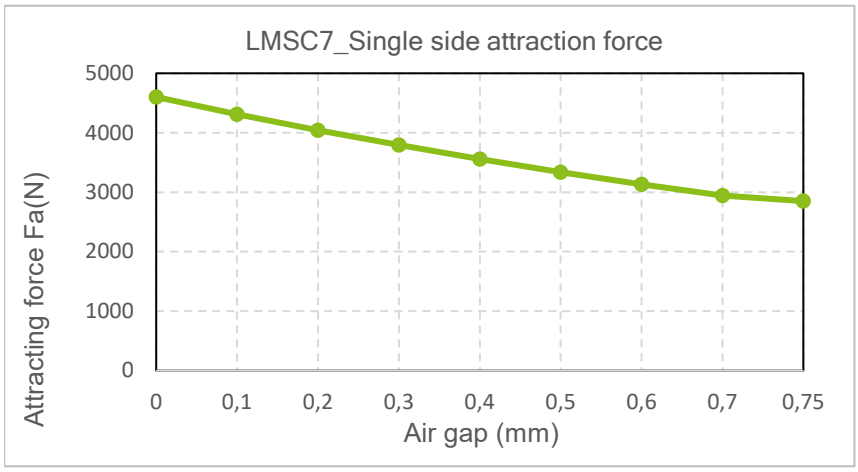

Table 5.1: Air gap-attracting force relationship chart

Air gap (mm)	0	0,1	0,2	0,3	0,4	0,5	0,6	0,7	0,75
Single side attracting force Fa (N)	4.601	4.313	4.042	3.796	3.556	3.338	3.134	2.942	2.850

Step to assemble (Remaining stator):

- Move the forcer base to install the remaining stators. (refer to Fig. 5.22)
- Use the non-magnetic tool to install one side of the stators for half of the stroke. (refer to Fig. 5.23)
- Place the non-magnetic object between the installation surfaces of the stators at two sides. (refer to Fig. 5.24)
- Use the non-magnetic tool to install the other side of the stators for half of the stroke. (refer to Fig. 5.25)

Fig. 5.22: Forcer base movement

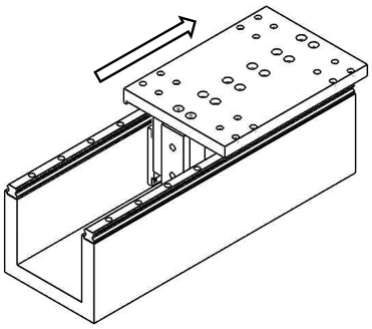

Fig. 5.23: Install one side of stators

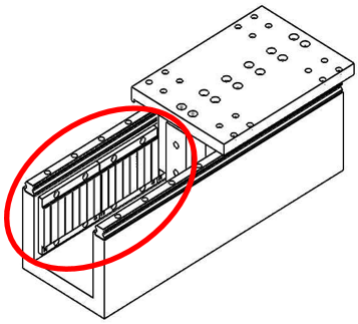

Fig. 5.24: Place the non-magnetic object

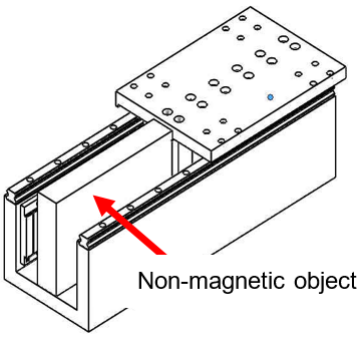

Fig. 5.25: Install the other side of stators

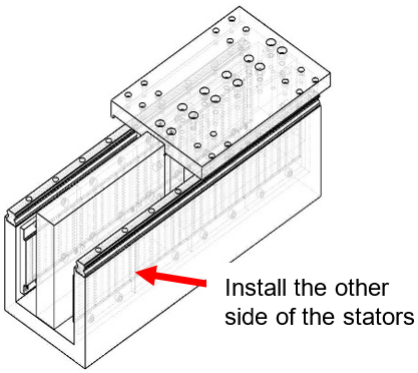

Fig. 5.26: LMSC force and stator installation illustration

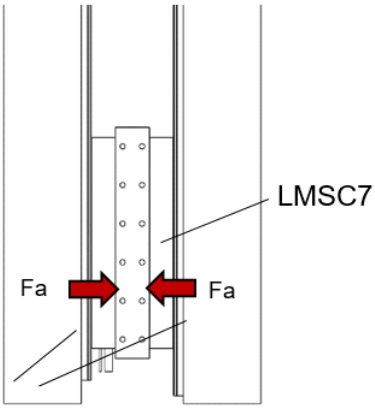

Table 5.2: LMSC uneven air gap-attraction force correspondence chart

Air gap 1 (mm)	0	0,05	0,15	0,25	0,35	0,45	0,55	0,65	0,75
Air gap 2 (mm)	1,5	1,45	1,35	1,25	1,15	1,05	0,95	0,85	0,75
Attracting force Fa (N)	2.838	2.633	2.230	1.840	1.461	1.090	724	361	0

5.2 Ironless linear motor installation

5.2.1 Precautions for installation of the LMC forcer and stator

⚠ Warning! Risk of forcer and stator assembly.

Prevent any hand clamping injury when you apply the products.

- Please handle the stator assembly carefully to prevent any hand clamping injury.

Attention!

- The stator warning label shall face upward
- After the installation of the stator assembly according to Section 4.2, please pay special attention to the gap between the stators.
- For the screw torque for fastening the forcer and stator assembly, please refer to Section 9.1.2.
- For the selection of the screw length and thread depth, please refer to Section 9.1.2.

Step to assemble:

- Use clean wiping cloth to dip with alcohol (95 % industrial alcohol), and clean the installation interface. (refer to Fig. 5.27)
- Use screws ① to attach the stator assembly ② at the right most side onto the baseplate ③. (refer to Fig. 5.28)
- Use screws ④ to install the forcer base ⑤ onto the linear sliding block ⑥. (refer to Fig. 5.29)
- Move the forcer base ⑦ to the left most side to facilitate the fastening of the forcer assembly ⑧. (refer to Fig. 5.30)
- Move the forcer assembly ⑨ installed properly to the right side, and determine whether there is any interference in the forcer and stator assembly in order to be ready for the installation of the next set of stator. (refer to Fig. 5.31)
- Fasten the remaining stator assemblies ⑩ onto the baseplate ⑪. (refer to Fig. 5.32)
- After the installation is complete, move, and slide the forcer base to confirm that there is no interference. (refer to Fig. 5.33)

Fig. 5.27: Clean the installation interface

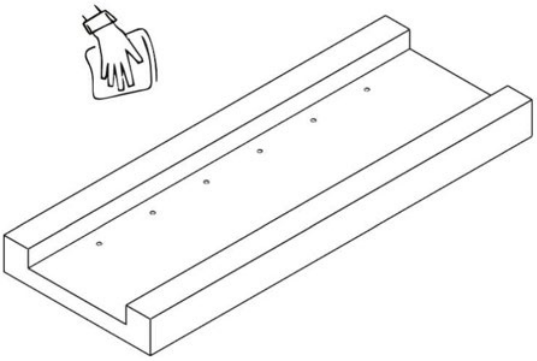

Fig. 5.28: Stator installation

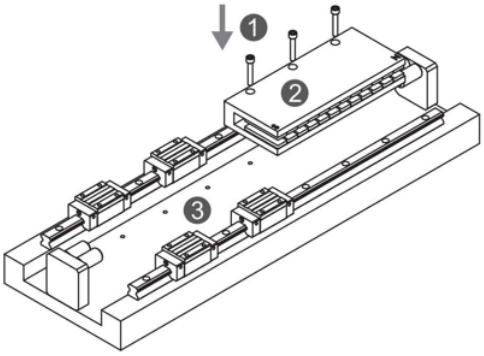

Fig. 5.29: Forcer base installation

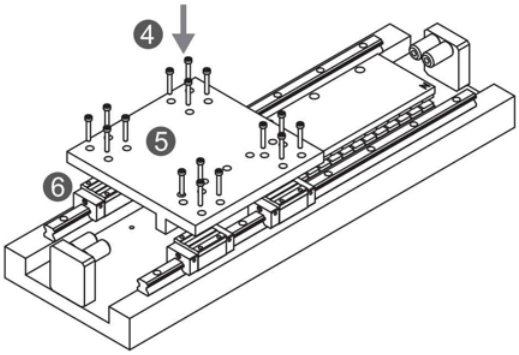

Fig. 5.30: Move the forcer base

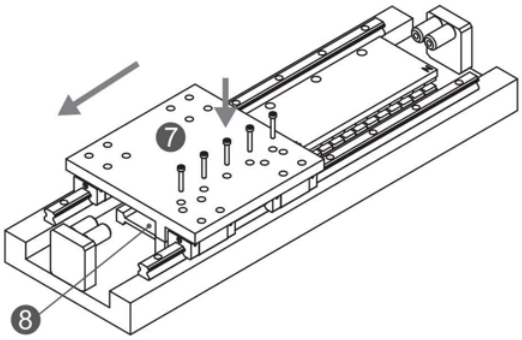

Fig. 5.31: Forcer installation

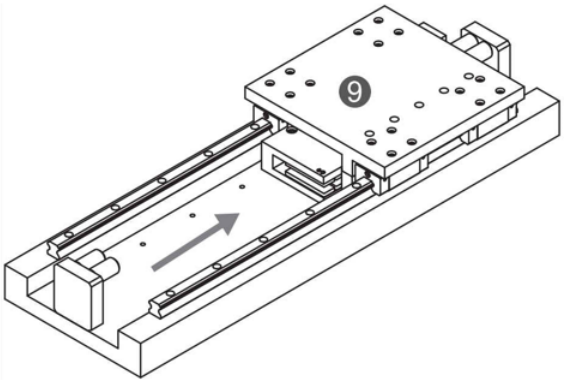

Fig. 5.32: Stator installation

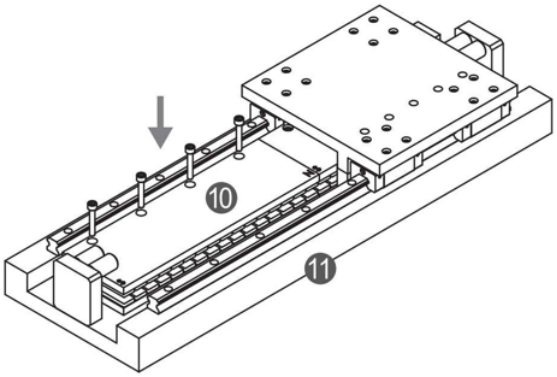

Fig. 5.33: Smoothness confirmation

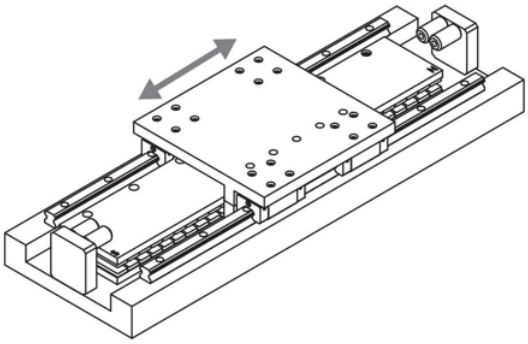

5.2.2 Precautions for installation of LMT forcer and stator

⚠ Warning! Risk of forcer and stator assembly.

Prevent any hand clamping injury when you apply the products.

- Please handle the stator assembly carefully to prevent any hand clamping injury.

Attention! Risk of forcer and stator assembly.

For stator and forcer installation, beware the abnormal gap between units.

- After the installation of the forcer assembly according to Section 4.3, the concentricity shall not be greater than 0,2 mm.
- After the installation of the stator assembly according to Section 4.3, please pay special attention to the gap between the stators.
- For the screw torque for fastening the forcer and stator assembly, please refer to Section 9.1.2.
- For the selection of the screw length and thread depth, please refer to Section 9.1.2.

Step to assemble:

- Use clean wiping cloth to dip with alcohol (95 % industrial alcohol), and clean the stator assembly. (refer to Fig. 5.34)
- Place the forcer assembly ① onto the stator assembly ②. (refer to Fig. 5.35)
- Use screws ③ to install the stator assembly ④ onto the fixation base ⑤, and measure the height difference and the left and right difference, and such difference shall not be greater than 0,2 mm (refer to Fig. 5.36).
- Use screws ⑥ to install the forcer base ⑦ onto the sliding block ⑧ (refer to Fig. 5.37).
- Use screws ⑨ to fasten the forcer assembly ⑩ onto the forcer base ⑪ (refer to Fig. 5.38).
- After the installation is complete, move, and slide the forcer base to confirm that there is no interference (refer to Fig. 5.39).

Fig. 5.34: Clean the installation interface

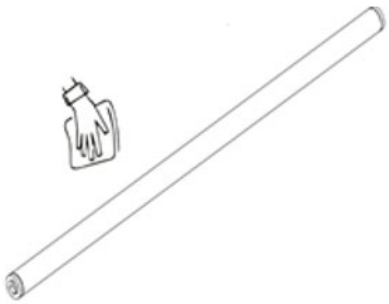

Fig. 5.35: Assemble the force and stator

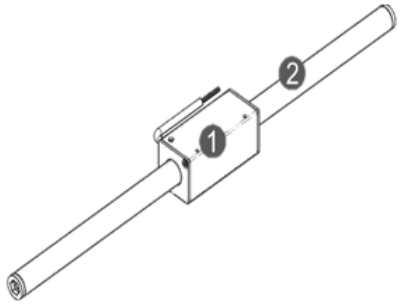

Fig. 5.36: Stator installation

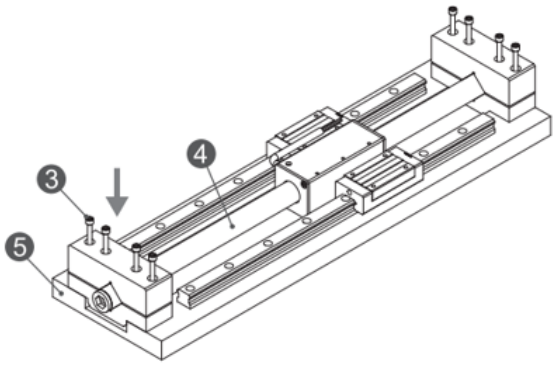

Fig. 5.37: Forcer base installation

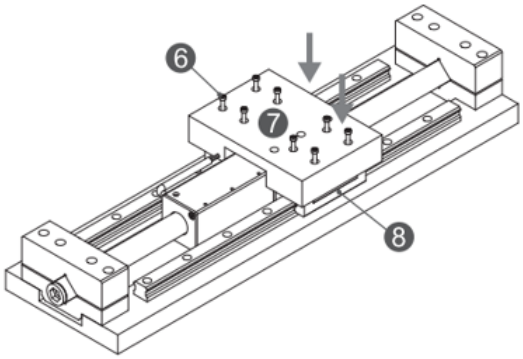

Fig. 5.38: Forcer installation

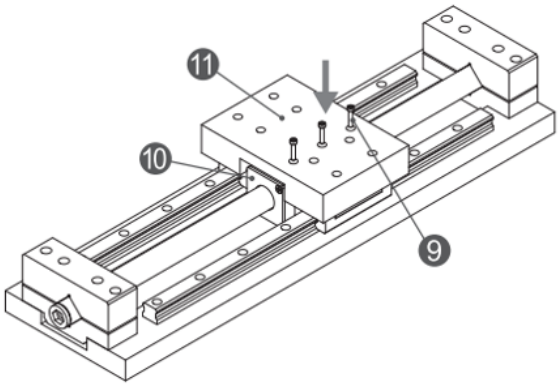

Fig. 5.39: Smoothness confirmation

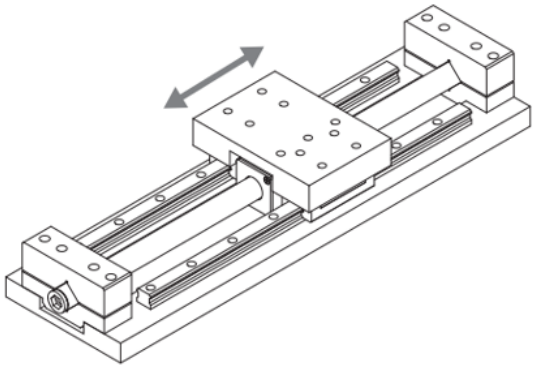

5.3 Water-cooling linear motor cooling system installation

5.3.1 Forcer and stator precision water-cooling installation

Step to assemble (Forcer precision water-cooling): refer to Fig. 5.40 – Fig. 5.41.

- Place the forcer precision water-cooling ② on top of the forcer ③, and the hole positions of the two objects shall be aligned and the direction shall be consistent.
- After aligning the hole positions of the forcer base ① and forcer precision water-cooling ② with the forcer ③, then perform installation.
- After the fastening is complete, it can then be installed onto the working platform sliding block. Please refer to the instructions in Section 5.1.2.

Fig. 5.40: Forcer precision water-cooling installation illustration

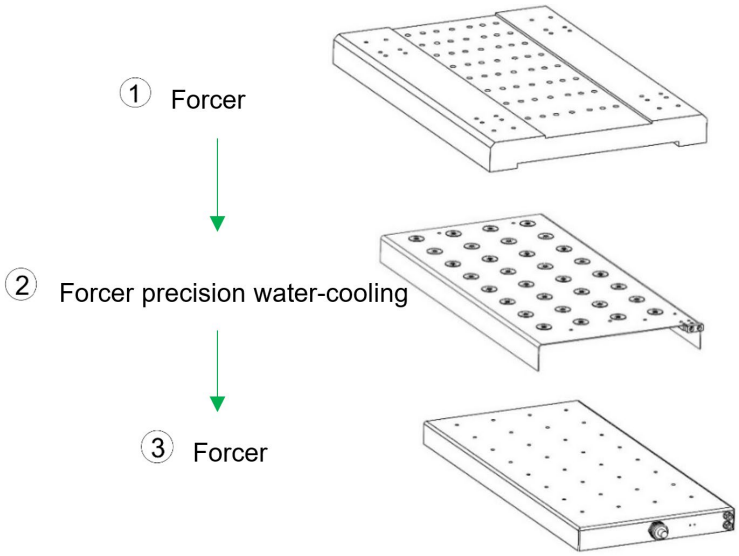

Fig. 5.41: Forcer precision water-cooling installation completion view

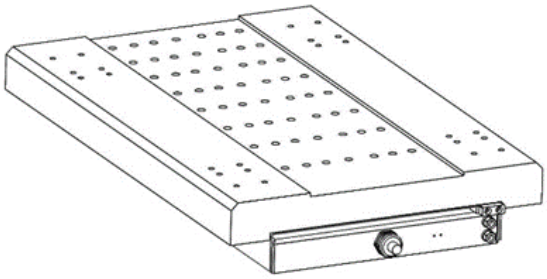

Step to assemble (Stator precision water-cooling): (refer to Fig. 5.42)

- Fasten the connecting base ① at one side onto the working position of the operating platform.
- Insert the cooling pipes ② into the connecting base ① on the platform.
- If the length of the stator ⑤ is longer, then use the joint method to connect the cooling pipes ②.
- After all cooling pipes ② are installed completely, use the connecting base ⑥ at the other side for adjustment and fastening with the cooling pipes.
- Place the stator ⑤ at the corresponding position on the cooling pipes ②.
- Fasten all stators ⑤. For the fastening method of multiple sets of stators, please refer to the stator installation described in Section 5.1.2.

Fig. 5.42: Stator precision water-cooling installation illustration

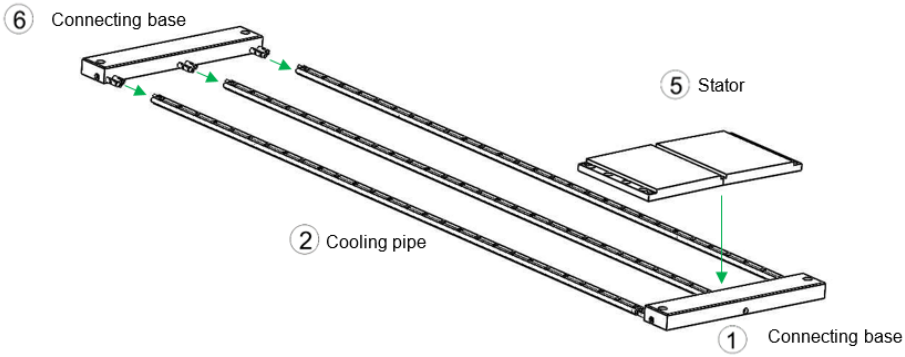

Fig. 5.43: Stator precision water-cooling installation completion view

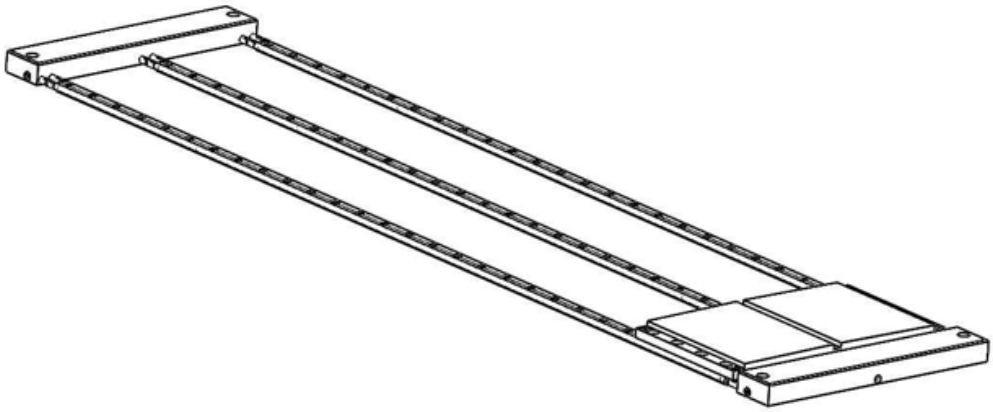

5.3.2 Water-cooling motor quick connector installation

Attention!

- When a quick connector of 1/8PT diameter is fastened onto the inlet or outlet, a white tape seal shall be wrapped around the connector in order to prevent any water leakage.
- When a quick connector of G1/8 diameter is fastened onto the inlet or outlet, with additional O-ring to prevent leakage.
- When a quick connector of PTFE coating on thread is fastened onto the inlet or outlet, a white tape seal is no need wrapped around the connector.
- The maximum pressure of the water-cooling loop is 10 bar.
- Use torque wrench (maximum torque shall not exceed 100 kgf-cm (9,8 Nm).
- If the above is not installed properly, it may cause damage, water leakage, or rupture of the water-cooling connector.
- All of the accessories provided on the factory product shall not be removed arbitrarily; otherwise, the product performance is not guaranteed.

LMFA series of forcer specification includes LMFA, LMFA-P and LMFP, and the pipe threads used are as shown in the table below:

Table 5.3: Forcer water-cooling connector threads

Forcer specification	Pipe thread
LMFA	1/8 PT
LMFA-P	G 1/8
LMFP	G 1/8
LMSC	1/8PT

Water-cooling connector ⑫ refers to the inlet, and water-cooling connector ⑬ refers to the outlet.

Fig. 5.44: Water-cooling connector installation location

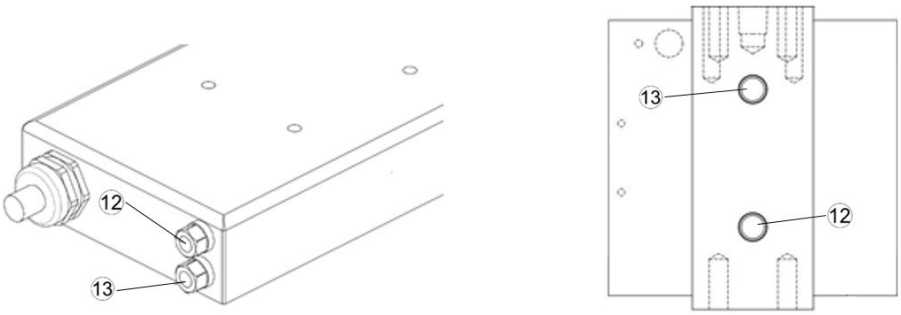

5.3.3 Precision water-cooling motor quick connector installation

LMFC water-cooling motor quick connector installation

Water-cooling connector ⑫ refers to the inlet, and water-cooling connector ⑬ refers to the outlet, and both are G1/8.

Fig. 5.45: Forcer precision water-cooling connector installation location

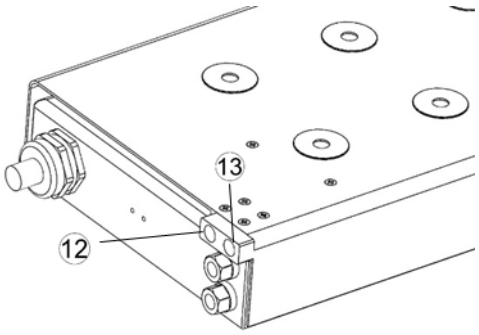

Fig. 5.46: Stator precision water-cooling connector installation location

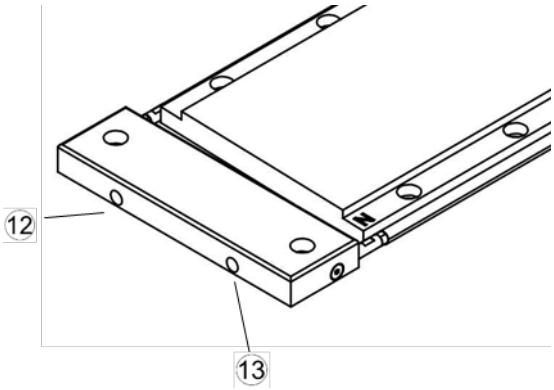

6 Selection of Motor Accessory and Power Cable

6.1 Standard specification of power cable

The lengths of power cable and temperature cable for standard linear motor are from 0,5 M to 1,2 M. The unit of length for cable is 100 mm. Cable outlets could be with connectors or with open ends as shown in Fig. 6.1.

Fig. 6.1: Outlet specifications for power cable

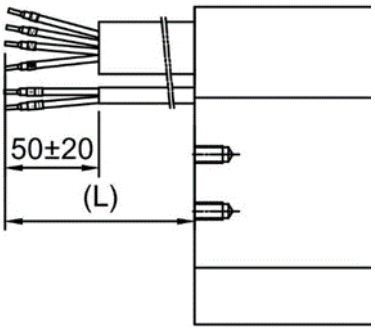

6.2 Recommended construction method for grounding protection

Shielding must be equipped with power cable or temperature cable. Also, the shielding must be grounded (as Fig. 6.2 shows).

After stripping off the shielding, the whole shielding can be cut to an appropriate length for more convenient operations. Do not cut part of the shielding; otherwise, the shielding might break easily and effect the grounding efficiency.

Fig. 6.2: Recommended grounding method

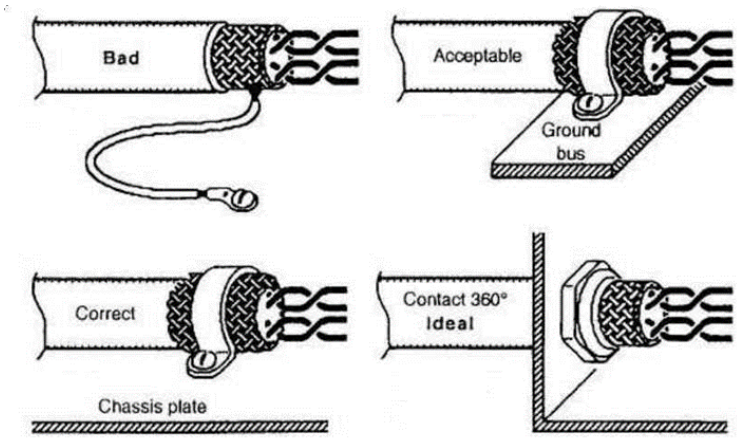

6.2.1 Recommended construction method for ironless linear motor grounding protection

For the ironless linear motor power cable, it is recommended to use an isolation net for the grounding protection. The isolation net is divided into two parts, one part for the grounding, and the other part is wrapped with copper foil to connect to the metal casing, as shown in Fig. 6.3.

Fig. 6.3: Ironless linear motor grounding protection

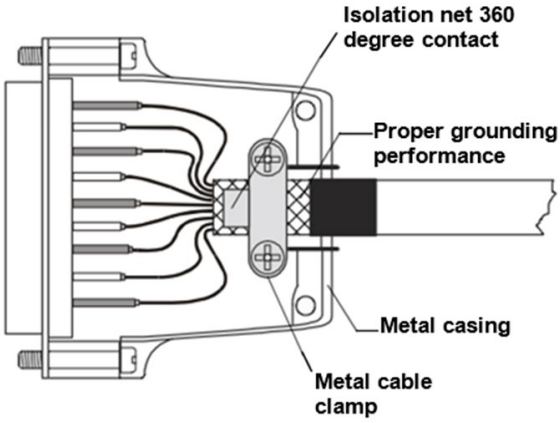

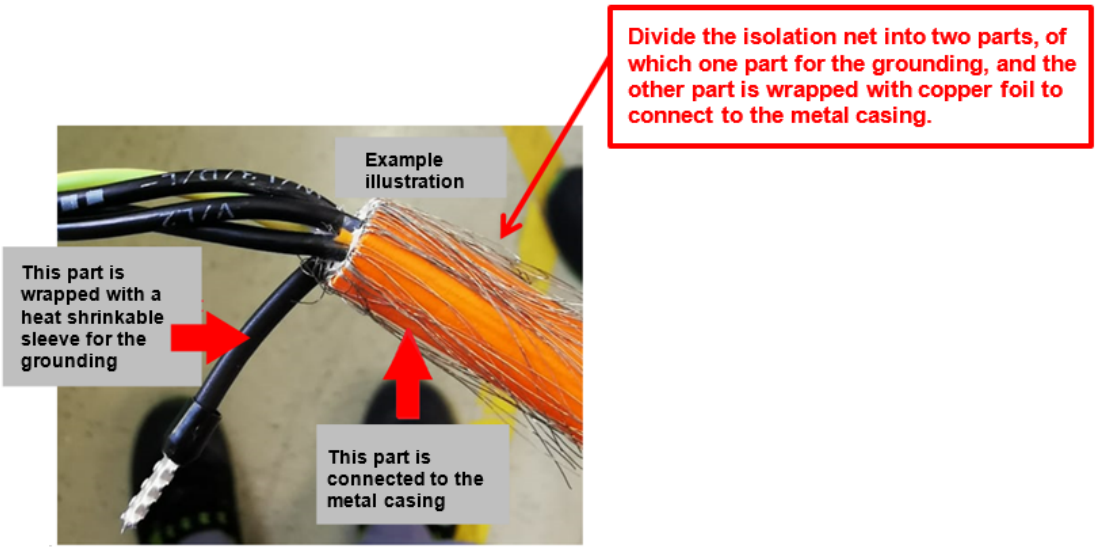

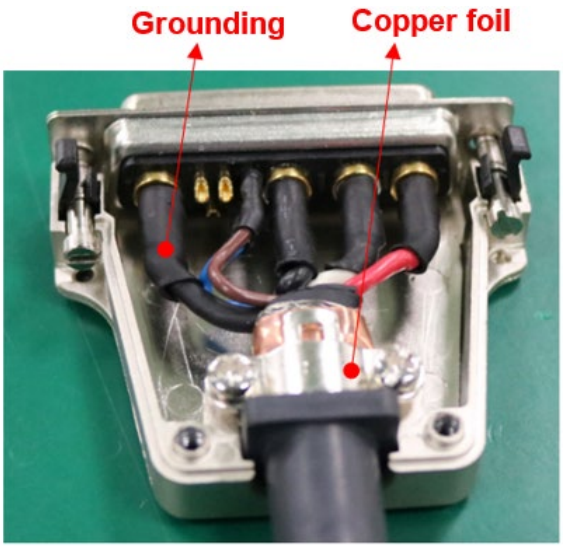

6.3 Recommended installation method of extension cable

As iron core linear motor LMSA-Z series is equipped with connector, extension cable should be connected in actual application. Therefore, please follow the installation method below to avoid any failures.

The motor cable should be fixed by cable tie and cable tray after assembling the forcer on the forcer plate. Also, the extension cable should be fixed by the cable tie and put into the cable chain to ensure it works in normal, as shown in Fig. 6.4 and Fig. 6.5.

If the cable doesn't be installed properly as shown in Fig. 6.6 and Fig. 6.7, failures such as shaking and worn-out might be happened and caused abnormal situation.

Recommended installation method

Fig. 6.4: Fix the motor cable by cable tie and cable tray

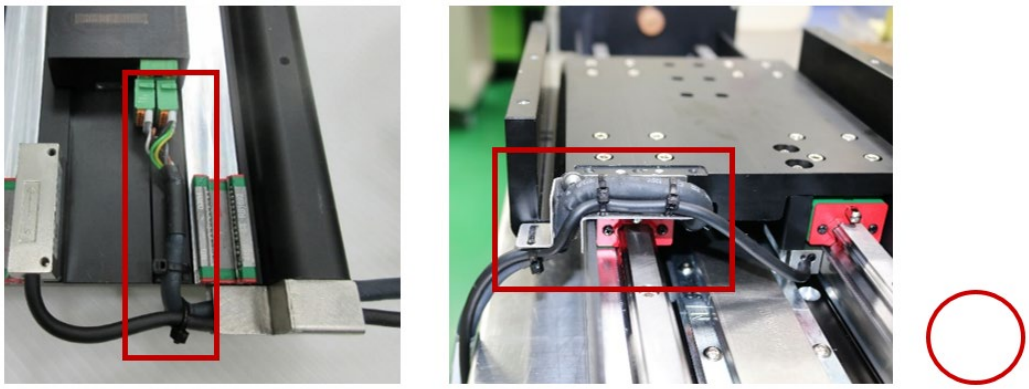

Fig. 6.5: Fix the extension cable by cable tie and put into the cable chain

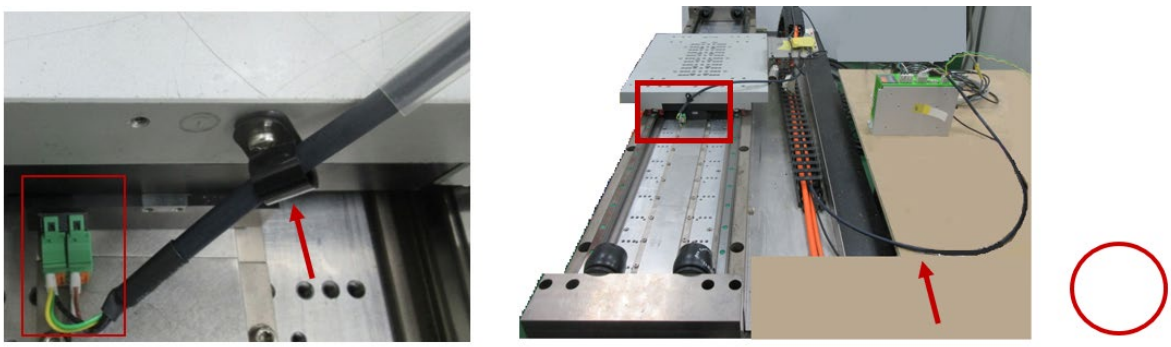

Improper installation method

Fig. 6.6: Extension cable is not fixed

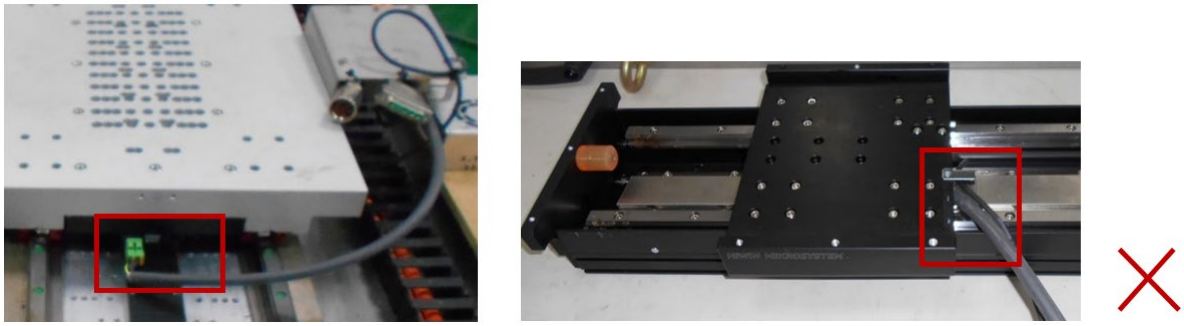

Fig. 6.7: Extension cable is not put into the cable chain

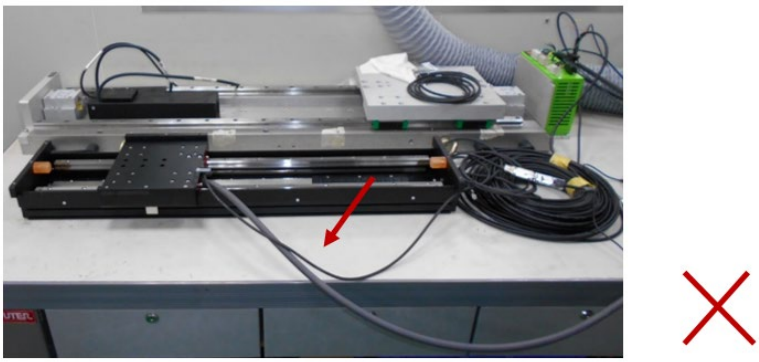

6.4 Connector selection and pin assignment

Table 6.1: Connection selection wiring chart

<table>
<tr><th>Model</th><th>Connector</th><th>Pin</th></tr>
<tr><td>LMSA series</td><td> 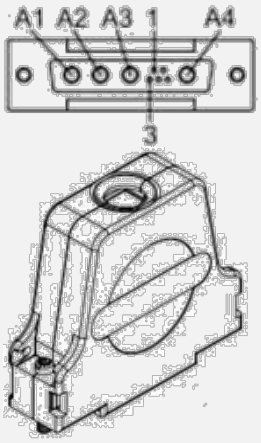

D-Sub 9-Pin Connector</td><td>
<table>
<tr><td colspan="2">Wiring Diagram</td></tr>
<tr><td>FMK3G (Male)</td><td>Signal</td></tr>
<tr><td>A1</td><td>V</td></tr>
<tr><td>A2</td><td>U</td></tr>
<tr><td>A3</td><td>W</td></tr>
<tr><td>A4</td><td>GND</td></tr>
<tr><td>1</td><td>T+</td></tr>
<tr><td>3</td><td>T-</td></tr>
<tr><td>CASE</td><td></td></tr>
</table>
</td></tr>
<tr><td>LMSA-Z series</td><td> 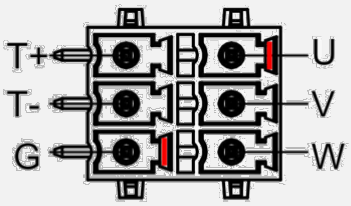

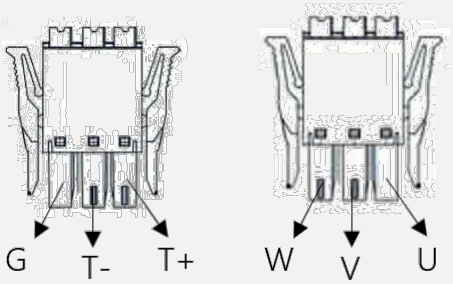

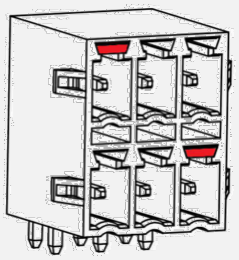
Pluggable Terminal Blocks</td><td>
<table>
<tr><td colspan="2">Pin Assignment</td></tr>
<tr><td>Pluggable Terminal Blocks</td><td>Cable Signal</td></tr>
<tr><td>U</td><td>V</td></tr>
<tr><td>V</td><td>U</td></tr>
<tr><td>W</td><td>W</td></tr>
<tr><td>T+</td><td>T+</td></tr>
<tr><td>T-</td><td>T-</td></tr>
<tr><td>G</td><td>G</td></tr>
</table>
</td></tr>
</table>

Model	Connector	Pin
LMFA series (940)	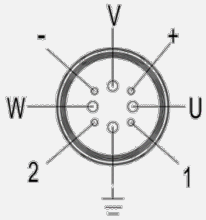 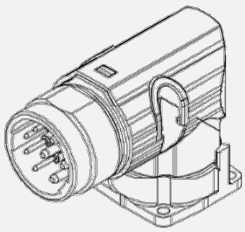 Metal connector (Angled Rotatable)	Wiring Diagram Male / Signal U / U V / V W / W ⏚ / ⏚ Case / T+ + / T1+ - / T1- 1 / T2+ 2 / T2- PTC SNM120 Pt1000
	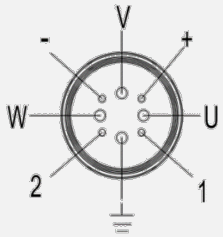 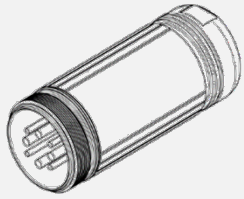 Metal connector	Wiring Diagram Male / Signal U / U V / V W / W ⏚ / ⏚ Case + / T1+ - / T1- 1 / T2+ 2 / T2- PTC SNM120 Pt1000
	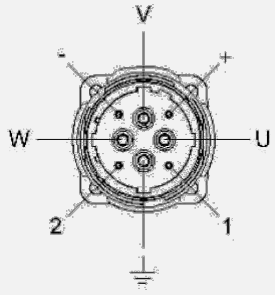 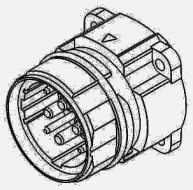 Metal connector	Wiring Diagram Male / Signal U / U V / V W / W ⏚ / ⏚ Case 1 / T1+ 2 / T1- + / T2+ - / T2- PTC SNM120 Pt1000

Model	Connector	Pin
LMFA series (923)	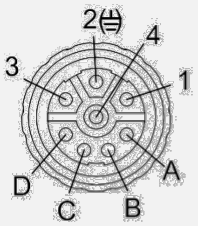 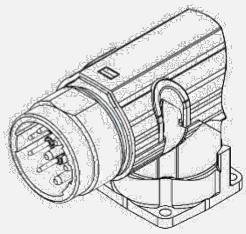 Metal connector (Angled Rotatable)	Wiring Table Male / Signal 1 / U 4 / V 3 / W (2) ⏚ / ⏚ Case A / T1+ (Gray) — PTC B / T1− (Gray) — SNM120 C / T2+ (Red) — Pt1000 D / T2− (White) — Pt1000
	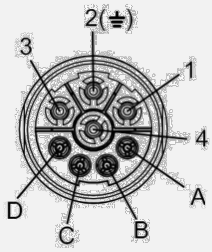 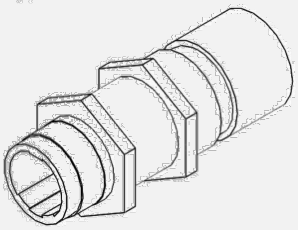 Metal connector	Wiring Table Male / Signal 1 / U 4 / V 3 / W (2) ⏚ / ⏚ Case A / T1+ (Gray) — PTC B / T1− (Gray) — SNM120 C / T2+ (Red) — Pt1000 D / T2− (White) — Pt1000
	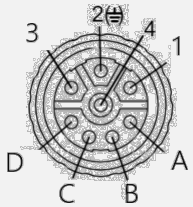 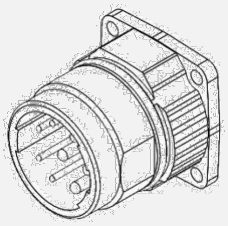 Metal connector	Wiring Table Male / Signal 1 / U 4 / V 3 / W 2(⏚) / ⏚ Case A / T1+ — PTC B / T1- — SNM120 C / T2+ — Pt1000 D / T2- — Pt1000

Model	Connector	Pin
LMSC7	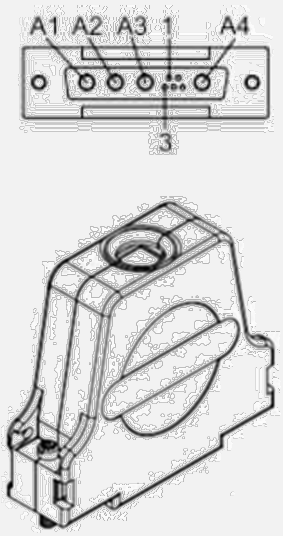 D-Sub 9-Pin Connector	
LMSS11	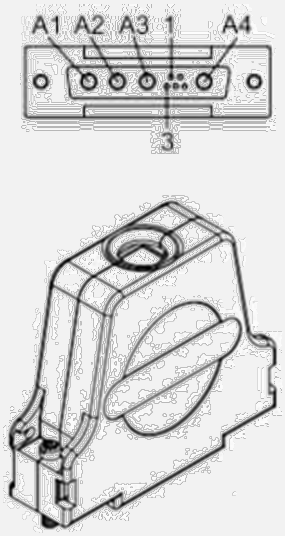 D-Sub 9-Pin Connector	
LMC A/B/C/D/E/ EFC/HUB	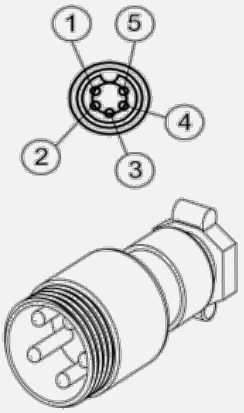 M16-P5P (Male)	

Wiring Diagram

FMK3G(Male)	Signal
A1	V
A2	U
A3	W
A4	GND
1	T+
3	T-
CASE	

Wiring Diagram

FMK3G (Male)	Signal
A1	V
A2	U
A3	W
A4	GND
1	T+
2	T-
CASE	

Wiring Diagram

Male	Signal
1	V
2	U
3	W
Case	GND
4	T+
5	T-

Model	Connector	Pin
LMC F/EFE/EFF	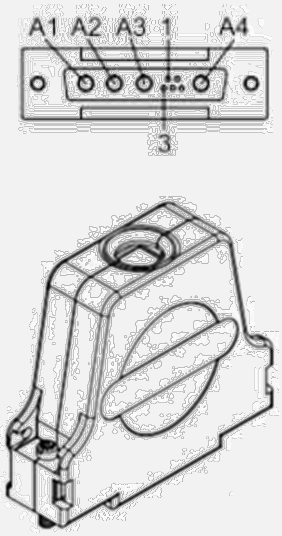 D-Sub 9-Pin Connector	Wiring Diagram FMK3G(Male) / Signal A1 / V A2 / U A3 / W A4 / GND 1 / T+ 3 / T- CASE /
LMT 2/6/A/B/C	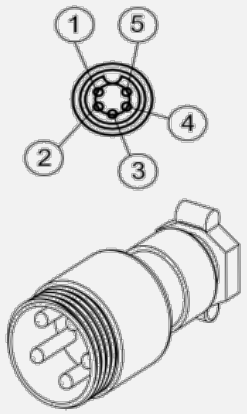 M16-P5P (Male)	Wiring Diagram Male / Signal 1 / V 2 / U 3 / W Case / GND 4 / T+ 5 / T-

6.5 Configuration of over-temperature protection

Table 6.2: Over-temperature protection configuration chart

	Configuration diagram
PTC SNM120	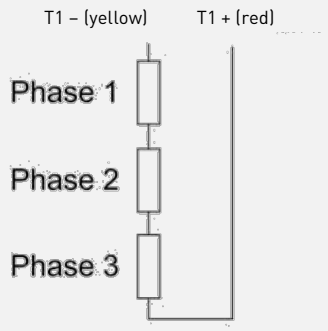
PT1000	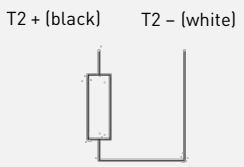
SKM120	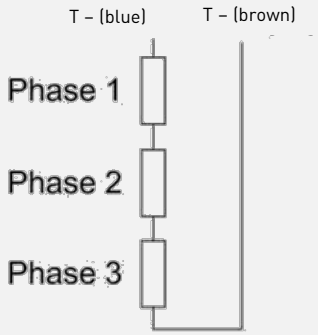

6.6 Hall sensor

⚠ Warning! Risk of injury from uncontrolled motor movements!

> An incorrectly installed or connected Hall sensor may cause uncontrolled motor movements which can lead to injuries or might damage the machine.
>
> ▶ Hall sensor may only be connected by specialist personnel.

For the driving control of a linear motor, Hall sensors can be selected and purchased to find the optimal electrical angle. Hall sensors can be divided into digital and analog sensors according to the signal output method. A digital hall sensor has relatively better anti-interference capability; however, it has a maximum electrical angle error of 30°. An Analog Hall sensor is prone to be affected by interference; nonetheless, it has no electrical angle error. The following provides further description on the hall sensors for iron core and ironless linear motors respectively.

Table 6.3: Hall sensor specification comparison chart with digital signal for iron core linear motors

Hall sensor specification	Output signal	Outlet mode	Hall sensor Illustration of dimensions	Applicable linear motor series
LMAHS	Digital	Connector	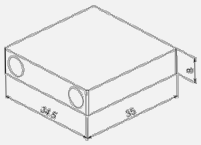	LMS Series
LMAHS-W	Digital	Bare cable		
LMAHSA	Digital	Connector	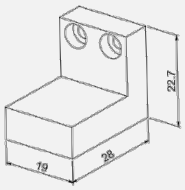	LMSA Series
LMAHSA-W	Digital	Bare cable		
LMAHF1	Digital	Connector	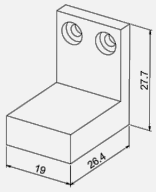	LMFA0–2 Series
LMAHF1-W	Digital	Bare cable		
LMAHF2	Digital	Connector	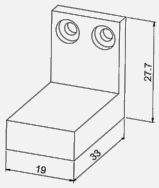	LMFA3–6 Series
LMAHF2-W	Digital	Bare cable		

Outlet mode and signal pin illustration

Example 1: Connector outlet mode and signal cable pin illustration

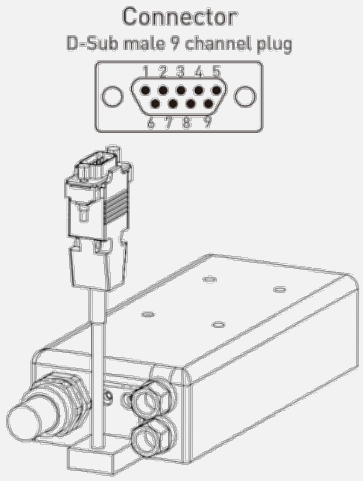

Signal cable	
Signal	Colour
VDC	1
Hall A(out)	2
Hall B(out)	3
Hall C(out)	4
GND	5
⏚	Casing

Example 2: Bare cable outlet mode and signal cable pin illustration

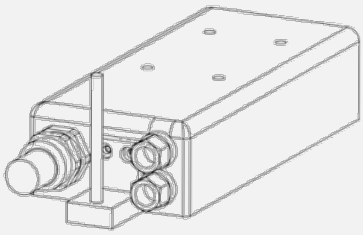

Signal cable	
Signal	Colour
VDC	Brown
Hall A(out)	White
Hall B(out)	Grey
Hall C(out)	Yellow
GND	Green
⏚	Isolation net

Table 6.4: Hall sensor specification comparison chart with analog signal for iron core linear motors

Hall sensor specification	Output signal	Outlet mode	Hall sensor Illustration of dimensions	Applicable linear motor series
LMAHSA-D	Analog	Bare cable	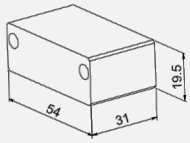	LMS Series
LMAHSAA-D	Analog	Bare cable	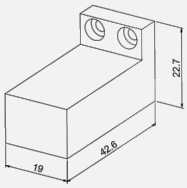	LMSA Series
LMAHFA1-D	Analog	Bare cable	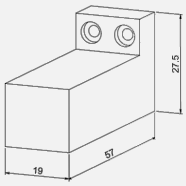	LMFA0–2 series
LMAHFA2-D	Analog	Bare cable	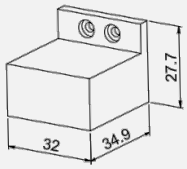	LMFA3–6 series

Outlet mode and signal pin illustration
Example: Analog output signal bare cable mode and signal cable pin illustration

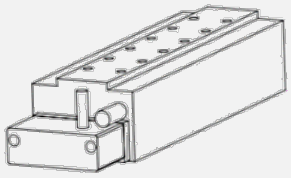

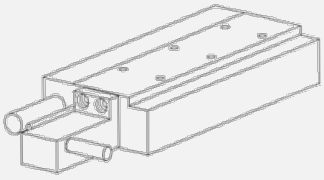

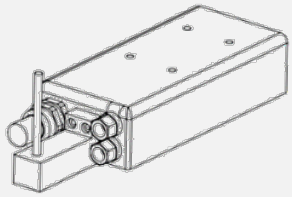

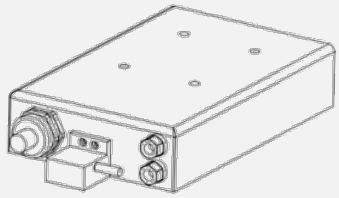

Signal cable	
Signal	Colour
VDC	Brown
A+	Red
A-	Blue
B+	Yellow
B-	Green
GND	White
⏚	Isolation net

Table 6.5: Hall sensor specification comparison chart with digital signal for LMC

Hall sensor specification	Output signal	Outlet mode	Hall sensor Illustration of dimensions	Applicable linear motor series
LMAHC	Digital	Connector	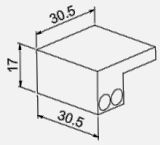	LMCA/LMCB/ LMCC series
LMAHC-W	Digital	Bare cable		
LMAHC2	Digital	Connector	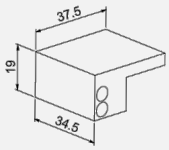	LMCD/LMCE Series
LMAHC2-W	Digital	Bare cable		
LMAHC3	Digital	Connector	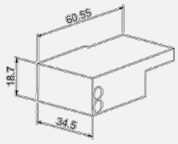	LMCF series
LMAHC3-W	Digital	Bare cable		
LMAHEF3	Digital	Connector	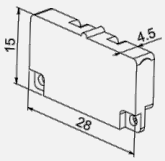	LMC-EFC/ LMC-EFE/ LMC-EFF series
LMAHEF3-W	Digital	Bare cable		

Applicable linear motor series	Outlet mode and signal pin illustration
LMCA/LMCB/LMCC series LMCD/LMCE Series LMCF series	Example 1: Connector outlet mode and signal cable pin illustration

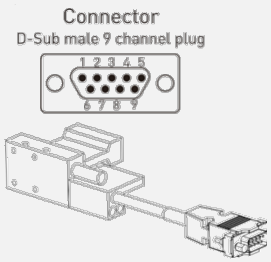

Signal cable	
Signal	Connector
Vcc	1
Hall A(out)	2
Hall B(out)	3
Hall C(out)	4
GND	5
⏚	Casing

Example 2: Bare cable outlet mode and signal cable pin illustration

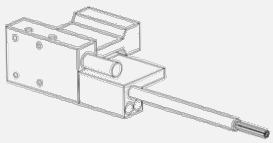

Signal cable	
Signal	Color
Vcc	Brown
Hall A(out)	White
Hall B(out)	Gray
Hall C(out)	Yellow
GND	Green
⏚	Isolation net

LMC-EFC/ LMC-EFE/ LMC-EFF series	Example 1: Connector outlet mode and signal cable pin illustration

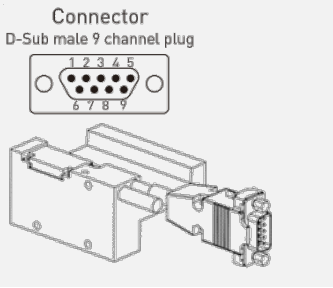

Signal cable	
Signal	Connector
Vcc	1
Hall A(out)	2
Hall B(out)	3
Hall C(out)	4
GND	5
⏚	Casing

Example 2: Bare cable outlet mode and signal cable pin illustration

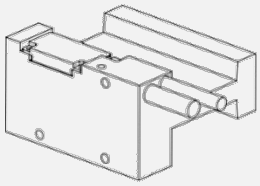

Signal cable	
Signal	Color
Vcc	Brown
Hall A(out)	White
Hall B(out)	Gray
Hall C(out)	Yellow
GND	Green
⏚	Isolation net

LMAHEF3 and LMAHEF3-W are not sold separately, and it is necessary to place orders together with the corresponding forcer series. This Hall sensor is shipped after it is fastened onto the forcer.

Table 6.6: Hall sensor specification comparison chart with Analog signal for LMC

Hall sensor specification	Output signal	Outlet mode	Hall sensor Illustration of dimensions	Applicable linear motor series
LMAHCA-D	Analog	Bare cable	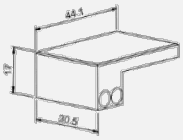	LMCA/ LMCB/ LMCC series

Outlet mode and signal pin illustration
Example 1: Bare cable outlet mode and signal cable pin illustration

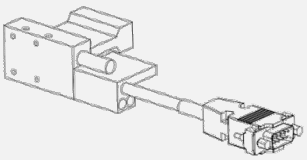

Signal cable	
Signal	Color
Vcc	Brown
A+	Red
A-	Blue
B+	Yellow
B-	Green
GND	White
⏚	Isolation net

Table 6.7: Hall sensor specification comparison chart with digital signal for LMT

Hall sensor specification	Output signal	Outlet mode	Hall sensor Illustration of dimensions	Applicable linear motor series
LMDHTA	Digital	Connector	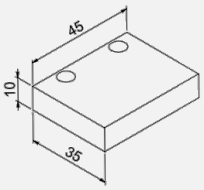	LMTA Series
LMDHTA-W	Digital	Bare cable		
LMDHTB	Digital	Connector	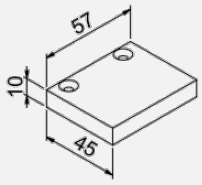	LMTB Series
LMDHTB-W	Digital	Bare cable		
LMDHTC	Digital	Connector	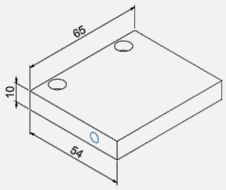	LMTC Series
LMDHTC-W	Digital	Bare cable		

Outlet mode and signal pin illustration
Example 1: Connector outlet mode and signal cable pin illustration

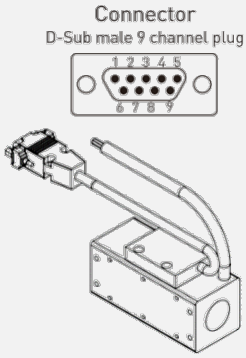

Signal cable	
Signal	Connector
Vcc	1
Hall A(out)	2
Hall B(out)	3
Hall C(out)	4
GND	5
⏚	Casing

Example 2: Bare cable outlet mode and signal cable pin illustration

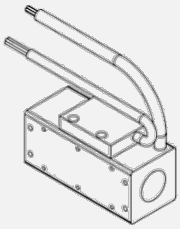

Signal cable	
Signal	Color
Vcc	Brown
Hall A(out)	White
Hall B(out)	Gray
Hall C(out)	Yellow
GND	Green
⏚	Isolation net

6.6.1 Hall sensor installation instructions

When a Hall sensor is fastened onto a forcer, the bottom surface of the Hall sensor needs to be coplanar with datum plane A or shall not exceed datum plane A.

Fig. 6.8: Hall sensor installation illustration

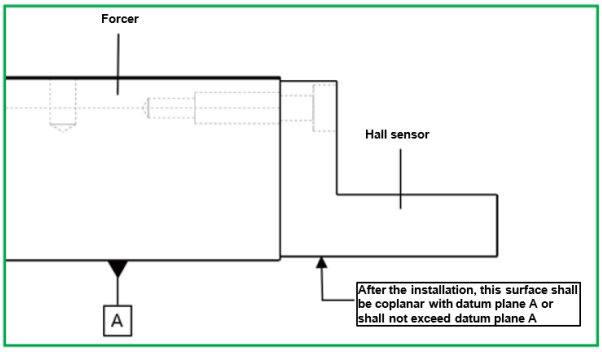

6.6.2 Selection of Hall sensor screws

For Hall sensors of iron core linear motors, M3 screws shall be used. For hall sensors of ironless linear motors, there are variations according to the model number.

Table 6.8: Hall sensor screw selection chart

Screw specification	Applicable Hall sensor series
M2	LMAHEF3, LMAHEF3-W
M3	LMAHS, LMAHS-W, LMAHSA, LMAHSA-W LMAHF1, LMAHF1-W, LMAHF2, LMAHF2-W LMAHSA-D, LMAHSAA-D, LMAHFA1-D, LMAHFA2-D LMAHC, LMAHC-W, LMAHC2, LMAHC2-W LMAHC3, LMAHC3-W, LMAHCA-D, LMDHTA, LMDHTA-W
M4	LMDHTB, LMDHTB-W, LMDHTC, LMDHTC-W

6.7 Hall encoder

Analog Hall encoder is used on the linear motor positioning platform. Apart from the incremental linear scale and magnetic scale available in the market, it provides customers with an additional option of encoder for selection. It only requires the installation of a Hall sensor read head such that encoder position scale can be omitted, and it is able to achieve excellent positioning capability when operating with the existing stator parts of the linear motor.

Characteristics:

- Use in conjunction with iron core linear motor.
- Replace linear scale, magnetic scale encoders.
- Easy for assembly.
- Suitable to applications with general precision requirements for point-to-point long stroke.
- Excellent dust-resistant, oil-resistant and water-resistant.

Fig. 6.9: Actual images of Hall encoder

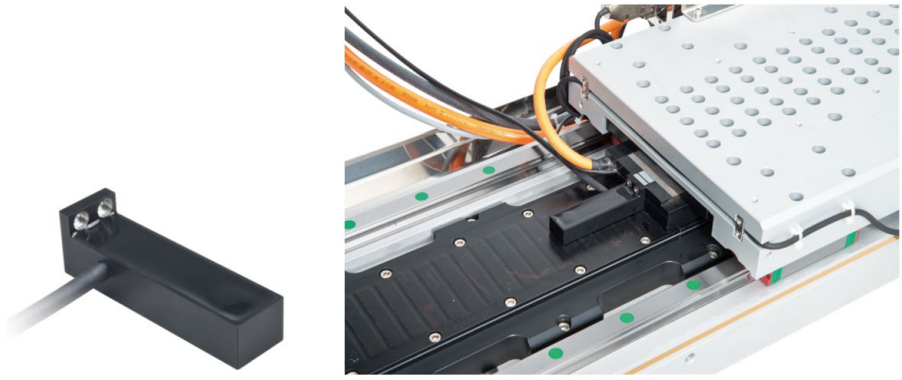

6.7.1 Hall encoder coding instructions

Product model number coding principle

Number		1	2	3	4
Code		LMAE	SA	A	05
1	LMAE	Series			
2	SA	Specification: SA: operate with LMSA linear motor F1: operate with LMFA0 – 2 linear motor F2: operate with LMFA3 – 6 linear motor			
3	A	Signal: A: incremental a			
4	05	Cable length: 0.5: 0,5 m 10: 1 m 30: 3 m 50: 5 m			

Signal pin illustration (refer to Table 6.9)

Table 6.9: Hall encoder signal pin chart

Function	Signal	Color
Power	+5V	Brown
	GND	White
Output signal	SIN+	Green
	SIN-	Yellow
	COS+	Blue
	COS-	Red

6.7.2 Hall encoder characteristic specification

Table 6.10: Hall encoder characteristic chart

	LMAESA	LMAEF1	LMAEF2
Power supply	5 V ± 5 %	5 V ± 5 %	5 V ± 5 %
Pole pair pitch	30 mm	30 mm	46 mm
Resolution (1)	7,5 µm	7,5 µm	11,5 µm
Repeatability (1)	± 15 µm	± 15 µm	± 23 µm
Accuracy (1) (2)	± 45 µm	± 45 µm	± 69 µm
Signal Output signal	SIN/COS 1Vp-p	SIN/COS 1Vp-p	SIN/COS 1Vp-p
Operating temperature (shall not freeze)	0 °C – 50 °C	0 °C – 50 °C	0 °C – 50 °C
Storage temperature (shall not freeze)	-5 °C – 60 °C	-5 °C – 60 °C	-5 °C – 60 °C

Note:

- Operate with HIWIN driver, subdivision quantity of 4000.
- Accuracy refers to the error after compensation (operate with HIWIN driver).
- LMAESA can be shipped together with the SSA single-axis positioning platform, and the repeatability can reach ± 5 µm.

6.7.3 Hall encoder dimension

Fig. 6.10: Hall encoder dimension illustration

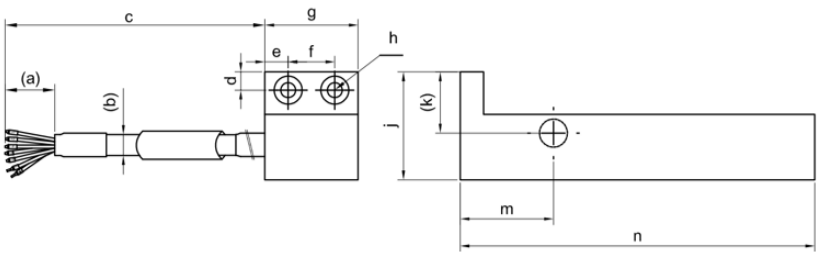

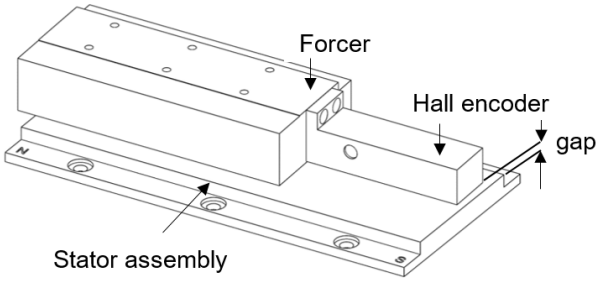

Table 6.11: Hall encoder specification dimension chart

Dimension	LMAESA-A	LMAEF1-A	LMAEF2-A
a (mm)	50	50	50
b (mm)	5, Bending radius R = 25	5, Bending radius R = 25	5, Bending radius R = 25
c (mm)	500 – 5.000	500 – 5.000	500 – 5.000
d (mm)	3,9	4,4	4,4
e (mm)	5	5	5
f (mm)	10	10	10
g (mm)	20	20	20
h (mm)	2-Ø3,5 THRU, Ø6×3DP	2-Ø3,5 THRU, Ø6×3DP	2-Ø3,5 THRU, Ø6×3DP
j (mm)	23,1	26,6	26,6
k (mm)	13,1	16,6	15,6
m (mm)	24,3	24,3	24,3
n (mm)	72,3	72,3	98,5
gap (mm)	1,1	1,4 (Cover type)/ 1,9 (Epoxy type)	1,4 (Cover type)/ 1,9 (Epoxy type)

7 Troubleshooting

Table 7.1: Troubleshooting

Symptom	Cause	Action
Motor cannot rotate at all.	Wrong cable wiring	Check the cable connected to the controller.
Wrong rotating direction	Wrong encoder setting	Check encoder settings.
	Wrong motor power cable wiring	Interchange the two-phase power cable connected to the controller.
Smell of burning	Abnormal operation of cooling system	Check the cooling system.
	Wrong controller setting	Check controller settings.
	Wrong motor parameters setting	Check motor parameters setting.
Abnormal temperature of motor outer casing	Abnormal operation of cooling system	Check the cooling system.
	Wrong controller setting	Check controller settings.
	Abnormal operation	Check assembly method.
	Abnormal temperature control display	Check assembly method and grounding of shielding.
Unstable rotation (vibration)	Insulation failure	Check the resistance value of phase/earth is larger than 10 MΩ.
	Wrong encoder installation	Check installation stiffness of encoder.
	Wrong encoder signal	Check encoder grounding and connection.
	Encoder signal interference	Check grounding of shielding.
	Wrong controller setting	Check controller settings.
Hard to rotate or abnormal friction noise	Abnormal installation of rotor	Check assembly method.
	Foreign objects exist in the air gap.	Remove foreign objects.
	Abnormal air gap	Check assembly tolerance and structural rigidity.

8 Waste Disposal

⚠ Danger! Danger from strong magnet!

Permanent magnetic materials must be fully demagnetized before subsequent treatment is performed. Otherwise, it may cause serious damage.

- As or the demagnetization of permanent magnetic materials are put in the furnace in a solid, heat-resistant container made of non-magnetic material, the heat must be at least 300 °C during a holding time of at least 30 minutes.

Attention! Danger caused by environmentally hazardous substances!

The danger to the environment depends on the type of substance used.

- Waste disposal must follow the local relevant regulations and the recycling procedure of recyclable materials.
- Waste materials include electronic materials, iron, aluminum, insulating materials, permanent magnetic materials, etc. Please follow the relevant procedures for recycling.
- If the packaging materials used in the product are recyclable, they must be recycled.

When products relevant to linear motor reach usage expiration, they need to be treated properly before disposal, especially the permanent magnetic materials. If they are not demagnetized according to the warning aforementioned, they might cause severe injury to workers.

HIWIN is not responsible for any damages, accidents, or injuries caused by failure to follow the above precautions.

9 Appendix

9.1 Screw selection rules and instructions

- Before installing forcer and stator parts, please check the installation dimension first.
- Clean the forcer and stator parts installation surfaces and machine surfaces.
- For screws, please use screws comply with the DIN912 standard or ISO standard 4762 and strength of 10.9.
- Please use new screws and prevent repetitively remove and install forcer and stator as much as possible.
- Please select appropriate screws according to the screw hole/threaded hole dimensions of forcer and stator.
- During the installation of the stator, the screw head shall not exceed the stator surface.
- During the fastening of screws, please use torque wrench, and refer to the recommended fastening torque values indicated in the following table.
- In moving and vibrating structures, must be fastening of screws with screw glue.

9.1.1 Force and stator screw installation hole specification table

Table 9.1: LMFA forcer, stator screw installation hole specification table

LMFA series forcer		LMFA series stator	
LMFA0□ (L)–LMFA2□ (L)	M5×0,8P×10DP	LMF0S□ (E)	Ø4,5 THRU; Ø8×2DP
		LMF1S□ (E)	Ø5,5 THRU; Ø10×1.5DP
LMFA0□ (L)–LMFA2□ (L)-P LMFP0□–2□	M5×0,8P×9DP		
		LMF2S□ (E)	Ø5,5 THRU; Ø10×3.5DP
LMFA3□ (L)–LMFA6□ (L)	M8×1,25P×14DP	LMF3S□ (E)	Ø9 THRU; Ø15×6DP
		LMF4S□ (E)	Ø9 THRU; Ø15×6DP
LMFA3□ (L)–LMFA6□ (L)-P LMFP3□–6□	M8×1,25P×12,5DP	LMF5S□E	Ø9 THRU; Ø15×6DP
		LMF6S□E	Ø6,5 THRU; Ø10.5×6DP

Table 9.2: LMSA forcer, stator screw installation hole specification table

LMSA series forcer		LMSA series stator		
LMSA□□ (L) LMSA□□-Z	M4×0,7P×4DP		Cover type	Epoxy type
		LMSA1S□ (EA)	Ø4,5 THRU	Ø4,5 THRU, Ø8×5,7DP
		LMSA2S□ (EA)	Ø5,5 THRU	Ø5,5 THRU, Ø10×5,7DP
		LMSA3S□ (EA)	Ø5,5 THRU	Ø5,5 THRU, Ø10×5,7DP
		LMSACS□ (EA)	Ø5,5 THRU	Ø5,5 THRU, Ø10×5,7DP

Table 9.3: LMSS forcer, stator screw installation hole specification table

LMSS series forcer		LMSS series stator	
LMSS11	M3×0,5P×5DP	LMSS1S□	Ø4,5 THRU

Table 9.4: LMSC forcer, stator screw installation hole specification table

LMSC series forcer		LMSC series stator	
LMSC7(L)	M8×1,25P×12DP	LMS3S□	Ø6,5 THRU, Ø11×4DP

Table 9.5: LMC forcer, stator screw installation hole specification table

LMC series forcer			LMC series stator	
	Bottom installation hole	Side installation hole		
LMCA	M3×0,5P×4,5DP	M4×0,7P×5DP	LMCAS□	Ø5,5 THRU, Ø9,5×8DP
LMCB			LMCBS□	Ø5,5 THRU, Ø9,5×8DP
LMCC			LMCCS□	Ø6,5 THRU, Ø11×10DP
LMCD	M5×0,8P×6DP	M4×0,7P×8DP	LMCDS□	Ø6,5 THRU, Ø11×8DP
LMCE			LMCES□	Ø6,5 THRU, Ø11×8DP
LMCF		M5×0,8P×9DP	LMCFS□	Ø6,5 THRU, Ø11×8DP

Table 9.6: LMC-EF forcer, stator screw installation hole specification table

LMC-EF series forcer		LMC-EF series stator	
	Bottom installation hole		
LMC-EFC	M4×0,7P×5DP M4×0,7P×12DP	LMC-EFCS□	Ø4,2 THRU, Ø7,5×6,35DP
LMC-EFE	M4×0,7P×5DP M4×0,7P×12DP	LMC-EFES□	Ø5,5 THRU, Ø9,5×6,85DP
LMC-EFF	M5×0,8P×10DP M5×0,8P×12DP	LMC-EFFS□	Ø5,5 THRU, Ø9,5×8DP

Table 9.7: LMC-HUB forcer, stator screw installation hole specification table

LMC-HUB series forcer			LMC-HUB series stator	
	Bottom installation hole	Side installation hole		
LMC-HUB	M3×0,5P THRU	M3×0,5P×3DP	LMC-HUBS□	Ø4,5 THRU, Ø8×4,5DP

Table 9.8: LMT forcer screw installation hole specification table

LMT series forcer	
LMT2	M3×0,5P×5DP
LMT6	M3×0,5P×5DP
LMTA	M4×0,7P×6DP
LMTB	M6×1,0P×9DP
LMTC	M8×1,25P×12DP

9.1.2 Forcer recommended screw fastening depth table

Table 9.9: Forcer screw fastening depth table

Forcer specification	Screw specification	Screw fastening depth H(mm)	Schematic illustration
LMSS	M3	4.5 0/-1	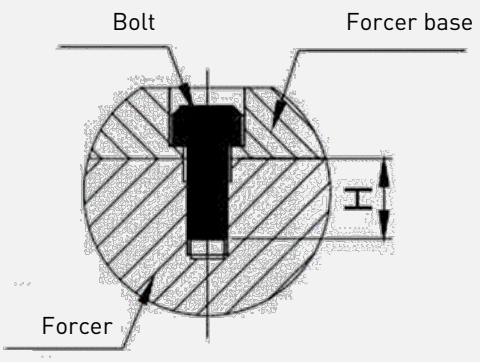
LMSA	M4	3.5 0/-1	
LMFA0□-2□	M5	9 0/-2.5	
LMFA0□-2□-P	M5	8 0/-2	
LMFP0□-2□	M5	8 0/-2	
LMFA3□-6□	M8	12 0/-3.5	
LMFA3□-6□-P	M8	11 0/-3	
LMFP3□-6□	M8	11 0/-3	
LMSC7	M8	11 0/-3	
LMCA-C	M3(bottom)	4 0/-1	
	M4(side)		
LMCD-E	M5(bottom)	5 0/-1	
	M4(side)	6 0/-2	
LMCF	M5(bottom)	5 0/-1	
	M5(side)	8 0/-2	
LMC-EFC-E	M4	4 0/-1	
		8 0/-3	
LMC-EFF	M5	8 0/-2s	
LMT2□	M3	4.5 0/-1	
LMT6□			
LMTA□	M4	5 0/-1	
LMTB□	M6	8 0/-2	
LMTC□	M8	11 0/-3	

Note:

LMC-EFC series forcer bottom threaded holes have two types of depths, please refer to the catalogue drawings.

Table 9.10: Screw fastening depth table for forcer equipped with precision water-cooling

Forcer specification	Screw specification	Screw fastening depth H(mm)	Schematic illustration
LMFA3□-6□	M8	24 0/-3.5	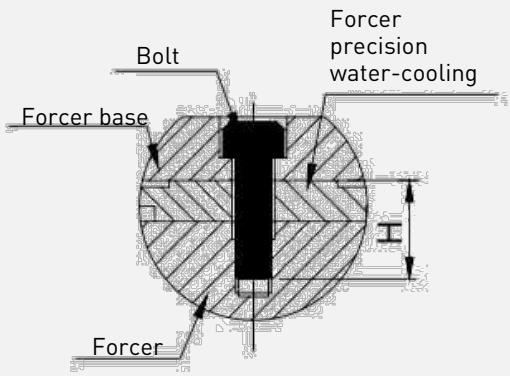
LMFA3□-6□-P	M8	23 0/-3	
LMFP3□-6□	M8	23 0/-3	

9.1.3 Stator recommended screw fastening minimum depth table

Table 9.11: Stator screw fastening depth table

Material	Carbon steel	Cast iron	Aluminum alloy
Fastening depth	1,2 × d	1,6 × d	1,8 × d

Note:

The maximum fastening depth is determined based on the threaded hole on the customer's machine.

9.1.4 Forcer and stator recommended screw torque table

Table 9.12: Screw torque specification table

Screw dimension	Torque (kgf-cm)	Torque (N-m)
M3 × 0,5P	15	1,5
M4 × 0,7P	34	3,3
M5 × 0,8P	69	6,8
M6 × 1,0P	118	11,6
M8 × 1,25P	286	28,1

9.2 Moving direction of Linear motor

Iron corn:

LMSA series

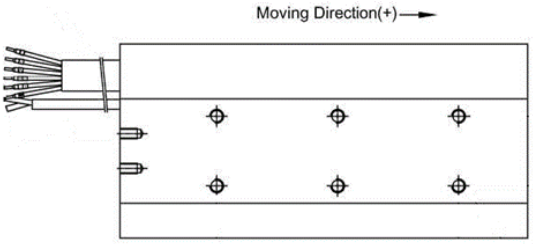

LMFA series

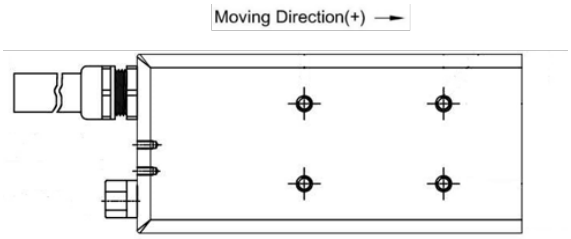

LMSS series

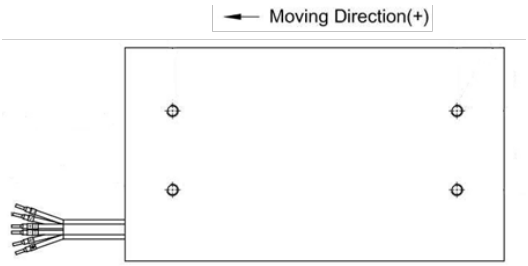

LMSC series

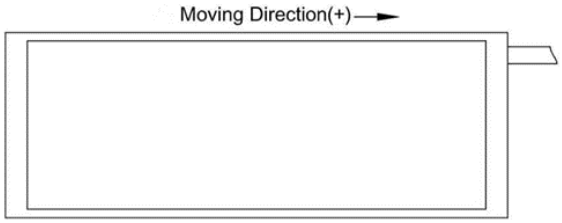

Ironless:

LMC series

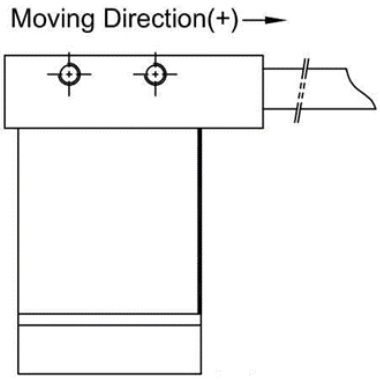

LMT series

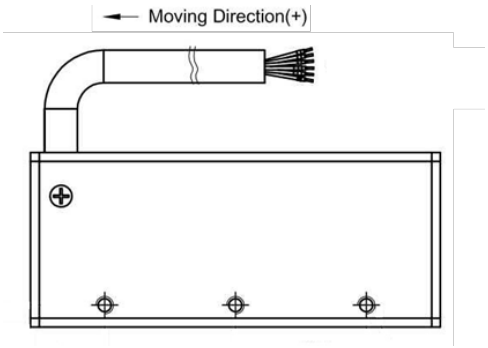

9.3 Introduction of Specific Terms

Continuous force F_c [N]

It is defined as the output thrust force of the motor running continuously without stopping under the environmental temperature of 25 °C, and such Continuous force corresponds to the continuous current applied to the motor I_c.

Continuous current I_c $[A_{rms}]$

It is defined as the current that can be supplied to the motor coil continuously under the environmental temperature of 25 °C, and it also generates the current for the Continuous force.

Water-cooling Continuous force F_c(wc) [N]

It is defined as the output thrust force of the motor running continuously without stopping under the water-cooling temperature of 20 °C, and such water-cooling Continuous force corresponds to the Continuous current (wc) applied to the motor I_c.

Continuous current (wc) I_c (wc) $[A_{rms}]$

It is defined as the current that can be supplied to the motor coil continuously under the water-cooling temperature of 20 °C, and it also generates the current for the water-cooling Continuous force.

Peak force F_p [N]

It is defined as the maximum thrust force that can be outputted by the motor within the time not exceeding one second. It is generally used for the purpose of acceleration and deceleration.

Peak current I_p $[A_{rms}]$

It is defined as the instant large current corresponding to the peak thrust achieved by the motor, and for the normal scope of operation, the peak current is permitted for one second.

Ultimate force F_u [N]

It is defined as the output thrust force corresponding to the Ultimate current I_u of the motor.

Ultimate current I_u $[A_{rms}]$

It is defined as five times of the continuous current I_c of the motor; under such current, the thrust force outputted by the motor is within the saturated non-linear zone, and the Force constant decreases. Input of such current can cause over-temperature risk of the motor, and the operating time is recommended to be less than 0,5 second.

Attraction force F_a [N]

It is defined as the acting force between the forcer and stator of an iron core linear motor under the rated air gap, and the preload applied by such force on the sliding block is borne by the sliding track.

Maximum winding temperature T_{max} [°C]

It is defined as the acceptable maximum temperature of the motor coil. The actual equilibrium temperature of the motor depends on the factors of the mechanism, cooling method and the movement planning etc. There may be some deviation from the theoretical calculation, and the result of actual measurement is typically used.

Electrical time constant K_e [ms]

It is defined as the time required for the current supplied to the motor to reach 63 % of the target value, and when such value is smaller, it means that the response time is faster.

Force constant K_f $[N/A_{rms}]$

It is defined as the output thrust force of the motor under the unit current, and except for the LMFA water-cooling motor series, when the rest of the series are under the normal operating scope, the output thrust force and the input current approach the linear relationship, and the non-linear portion is affected by the iron core saturation.

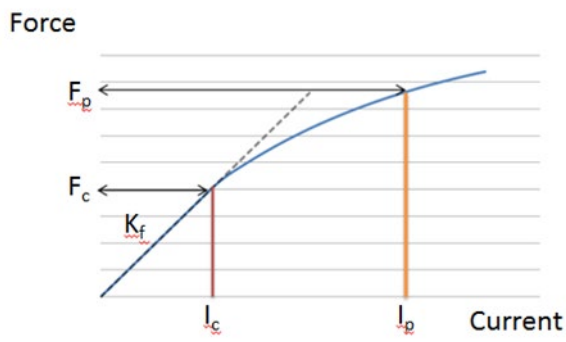

Resistance R_{25} [Ω]

It is defined as the line-to-line resistance of the motor measured when the coil temperature is 25 °C; the resistance increases along with the increase of the temperature.

$$R_c = R_{25} \times (1 + 0.00393) \times (T_c - 25)$$

R_c: refers to the line-to-line resistance under any temperature

T_c: any temperature

Inductance L [mH]

It is defined as the line-to-line inductance (excluding stator) of the motor measured.

Pole pair pitch 2τ [mm]

It is defined as the distance between two magenta of the same polarity on the stator, i.e. N→N or S→S.

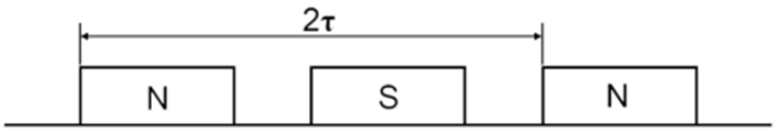

Back EMF constant K_v [$V_{rms}/(m/s)$]

It is defined as the induced EMF generated by the unit speed of the motor when the magnet temperature is 25 °C. It occurs when the coil senses a magnetic field change, and the EMF generated to resist the current passing through.

Motor constant K_m [$N/\sqrt{W}$]

It is defined as the ratio of the motor output thrust force to the square root of the power consumption when the coil and magnet temperatures are 25 °C. As the motor constant is higher, it means that when the motor outputs a specific thrust force, there is a lower power loss, and such constant is used as one of the indicators for determining the motor efficiency.

Thermal resistance R_{TH} [°C/W]

It is defined as the thermal resistance from the internal of the motor coil to the heat dissipating environment. As the thermal resistance is smaller, it means that under the same amount of heat input, the temperature difference between the coil and the heat dissipating environment is smaller, i.e. the heat dissipating effect is better.

Thermal time constant t_{TH} [sec]

It is defined as the time required for the coil initial temperature to T_0 rise to 63 % of the Maximum winding temperature T_{max} when the motor is supplied with the continuous current.

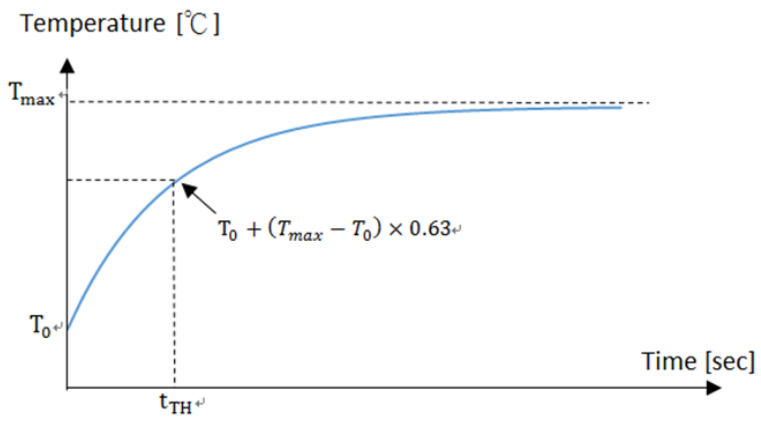

Minimum flow rate (L/min)

It is defined as the minimum flow rate of the coolant required for the motor to reach the water-cooling Continuous force under the rated Temperature of cooling water $F_c(wc)$.

Temperature of cooling water [°C]

It is defined as the temperature required to be reached by the motor coolant under the minimum flow rate in order to achieve the water-cooling Continuous force $F_c(wc)$.

Pressure drop ΔP [bar]

It is defined as the pressure difference between the inlet and outlet when the coolant is under the minimum flow rate.

Peak force maximum speed V_{max,F_p} [m/s]

It is defined as the maximum speed that can be achieved by the motor under the Peak force; this parameter depends on the Maximum DC bus voltage.

Maximum electric power input $P_{EL,max,}$ [W]

It is defined as the required input power under the condition where the motor is operating at the Peak force with maximum speed V_{max,F_p} and Maximum dissipated heat output $Q_{P,H,max}$.

Maximum dissipated heat output $Q_{P,H,max}$ [W]

It is defined as the heat generated by the coil of the motor when the coil is at the maximum temperature T_{max}.

Stall current I_0 [A_{rms}]

It is defined as the current upper limit that can be supplied under the condition where the motor is under the environmental temperature of 25 °C and the locked-rotor condition, and such value is related to the criteria of heat dissipation.

Stall force F_0 [N]

It is defined as the thrust force upper limit that can be provided when the motor is under the short stroke (stroke smaller than the pole pair pitch 2τ) and the locked-rotor application, and such value is limited by the stall current.

Maximum DC bus voltage [VDC]

It is defined as the Maximum DC bus voltage that can be used by the motor under the normal working environment.

10 Declaration of Conformity

according to Low Voltage EC directive 2014/35/EU

Name and address of the manufacturer:

HIWIN MIKROSYSTEM CORP
No.6, Jingke Central Rd.,
Taichung Precision Machinery Park,
Taichung 40852, Taiwan

This declaration relates exclusively to the machinery in the state in which it was placed on the market, and excludes components which are added and/or operations carried out subsequently by the final user. The declaration is no more valid, if the product is modified without agreement.

Herewith we declare, that the machinery described below:

Product Denomination	Electrical power drive systems (Motor Drives)
Model/Type:	Linear Motor LMC, LM F, LM FA, LMS, LMSA, LMSC
Year of Manufacture:	From 2019

Is complying with all essential requirements of Directive 2014/35/EU low voltage directive. In addition the product is in conformity with the EC Directives 2011/65/EU RoHS and the amendment Directive 2015/863/EC.

Harmonized standards used:

2014/30/EU EMC directive
EN 60034-1 Rotating electrical machines – Part 1: Rating and performance 2010 + Cor.: 2010
EN 60034-5 Rotating electrical machines – Part 5: Degrees of protection provided by Integral design of rotating electrical machines (IP-code) classification 2001 + A1: 2007

Additional explanations:

This product is a built-in component, which cannot fully meet the requirements for complete apparatus, machines or installations. Therefore it may only be used for built-in purpose. The product may only be evaluated with regards to its electrical and mechanical safety after it has been installed in the product intended for the final user. The EMC properties may change after installation of the component. Therefore a review of the end product (complete apparatus, machines or installations) by the manufacturer of the final product is required.

We live motion.

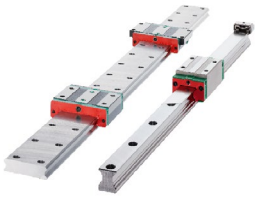

Linear Guideways

Ballscrews

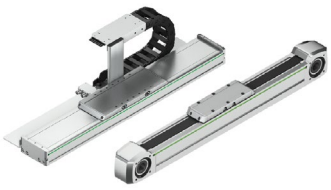

Linear Axes

Linear Axis Systems

Torque Motors

Robots

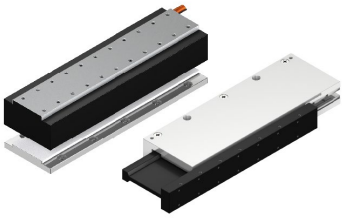

Linear Motors

Rotary Tables

Drives & Servo Motors

Germany
HIWIN GmbH
Brücklesbünd 1
77654 Offenburg
Deutschland
Fon +49 781 93278-0
info@hiwin.de
hiwin.de

Taiwan
Headquarters
HIWIN Technologies Corp.
Nr. 7, Jingke Road
Precision Machinery Park
Taichung 40852
Táiwān
Fon +886 4 2359-4510
business@hiwin.tw
hiwin.tw

Taiwan
Headquarters
HIWIN Corp.
No. 6, Jingke Central Road
Precision Machinery Park
Taichung 40852
Táiwān
Fon +886 4 2355-0110
business@hiwinmikro.tw
hiwinmikro.tw

France
HIWIN GmbH
4 Impasse Joffre
67202 Wolfisheim
Frankreich
Fon +33 3 882884-80
contact@hiwin.fr
hiwin.fr

Poland
HIWIN GmbH Biuro Warszawa
ul. Puławska 405a
02-801 Warszawa
Polska
Fon +48 22 46280-00
info@hiwin.pl
hiwin.pl

Switzerland
HIWIN (Schweiz) GmbH
Eichwiesstraße 20
8645 Jona
Schweiz
Fon +41 55 22500-25
sales@hiwin.ch
hiwin.ch

Italy
HIWIN Srl
Straße Pitagora 4
20861 Brugherio (MB)
Italia
Fon +39 039 28761-68
info@hiwin.it
hiwin.it

Slovakia
HIWIN s.r.o., o.z.z.o.
Mládežnicka 2101
01701 Považská Bystrica
Slovensko
Fon +421 424 4347-77
info@hiwin.sk
hiwin.sk

Czech Republic
HIWIN s.r.o.
Medkova 888/11
62700 Brno
Česká republika
Fon +42 05 48528-238
info@hiwin.cz
hiwin.cz

Denmark
HIWIN GmbH
info@hiwin.dk
hiwin.dk

Netherlands
HIWIN GmbH
info@hiwin.nl
hiwin.nl

Austria
HIWIN GmbH
info@hiwin.at
hiwin.at

Hungary
HIWIN GmbH
info@hiwin.hu
hiwin.hu

Romania
HIWIN GmbH
info@hiwin.ro
hiwin.ro

Slovenia
HIWIN GmbH
info@hiwin.si
hiwin.si

China
HIWIN Corp.
hiwin.cn

Japan
HIWIN Corp.
info@hiwin.co.jp
hiwin.co.jp

USA
HIWIN Corp.
info@hiwin.com
hiwin.us

Korea
HIWIN Corp.
hiwin.kr

Singapore
HIWIN Corp.
hiwin.sg